Rating Label

size: 85x71 mm

POWER ACOUSTIK

Car AM/FM Radio, Mech-less MP3 Player,
With Bluetooth, USB/SD Inputs
Model: No.: PL-81B

7 09483 05725 8

12V ⎓ 10A NEGATIVE GROUND

FREQUENCY RANGE: FM 87.5 ~ 107.9 MHz AM 530 ~ 1710 KHz (USA)
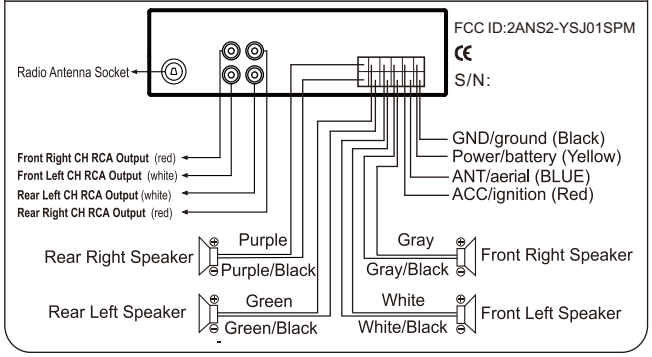
This device complies with part 15 of the FCC Rules. Operation is subject to the following two conditions:
(1) This device may not cause harmful interference, and (2) this device must accept any interference received, including interference that may cause undesired operation.