FCC Test Report

FCC ID	:	**2ANR7-T56009**
Equipment	:	**Tire-pressure monitoring system (TPMS)**
Model No.	:	**VT-T56009** **(Refer to item 1.1.1 for more details)**
Brand Name	:	**ATEQ**
Applicant	:	**ATEQ INSTRUMENTS(ASIA)PTE LTD.TAIWAN BRANCH(SINGAPORE)**
Address	:	**3 LANE223, SAN JIA DONG STREET, 40642, TAICHUNG, TAIWAN.**
Standard	:	**47 CFR FCC Part 15.209**
Received Date	:	**Aug. 05, 2019**
Tested Date	:	**Aug. 20 ~ Aug. 26, 2019**

We, International Certification Corp., would like to declare that the tested sample has been evaluated and in compliance with the requirement of the above standards. The test results contained in this report refer exclusively to the product. It may be duplicated completely for legal use with the approval of the applicant. It shall not be reproduced except in full without the written approval of our laboratory.

Reviewed by: **Approved by:**

Along Chen / Assistant Manager **Gary Chang / Manager**

Testing Laboratory 2732

Table of Contents

1 GENERAL DESCRIPTION 5

1.1 Information 5
1.2 Test Setup Chart 7
1.3 The Equipment List 8
1.4 Test Standards 8
1.5 Deviation from Test Standard and Measurement Procedure 8
1.6 Measurement Uncertainty 9

2 TEST CONFIGURATION 10

2.1 Testing Condition 10
2.2 The Worst Test Modes and Channel Details 10

3 TRANSMITTER TEST RESULTS 11

3.1 Conducted Emissions 11
3.2 Radiated Emissions 14

4 TEST LABORATORY INFORMATION 21

Release Record

Report No.	Version	Description	Issued Date
FR980501	Rev. 01	Initial issue	Sep. 12, 2019

Summary of Test Results

FCC Rules	Test Items	Measured	Result
15.207	Conducted Emissions	[dBuV/m at 3m]: 0.601MHz 46.77 (Margin -9.23dB) - QP	Pass
15.209	Radiated Emissions	[dBuV/m at 3m]: 0.125MHz 105.55 (Margin -0.12dB) - AV	Pass

Declaration of Conformity:
The test results with all measurement uncertainty excluded are presented in accordance with the regulation limits or requirements declared by manufacturers.
Comments and Explanations:
The declared of product specification for EUT presented in the report are provided by the manufacturer, and the manufacturer takes all the responsibilities for the accuracy of product specification.

1 General Description

1.1 Information

1.1.1 Product Details

The following models are provided to this EUT.

Brand Name	Model Name	Product Name	Description
ATEQ	GM EL-52545	Tire-pressure monitoring system (TPMS)	For marketing purpose
	VT-T56009		
	VT-56		
	VT-56SE		
	VT-65		
	3838		
	ET3838		

✦ All models are electrically identical, different model names are for marketing purpose.
✦ The above models, model **VT-T56009** was selected as a representative one for the final test and only its data was recorded in this report.

1.1.2 Specification of the Equipment under Test (EUT)

RF General Information				
Frequency Range (kHz)	**Modulation**	**Ch. Frequency (kHz)**	**Channel Number**	**Data/Bit Rate**
123 ~ 127	ASK	125	1	100bps, 3.9kbps, 5kbps Baud

1.1.3 Antenna Details

Ant. No.	Type	Connector	Gain (dBi)	Remark
1	WIRE	N/A	7	---

1.1.4 EUT Operational Condition

Supply Voltage	5Vdc from AC adapter 3.7Vdc from battery

1.1.5 Accessories

Accessories		
No.	**Equipment**	**Description**
1	AC adapter	Brand: DEE VAN ENTERPRISE CO., LTD. Model: DSA-10PFP-05 050200 I/P: 100-240Vac, 50/60Hz, 0.3A O/P: 5Vdc, 2A
2	Lithium battery	Brand: Shenzhen Honcell Energy Co., Ltd. Model: HCP104060FC Rating: 3.7Vdc, 3000mAh
3	USB cable	1m non-shielded with two cores
4	RJ45 cable	1.7m non-shielded with one core
5	OBD	---

1.2 Test Setup Chart

Test Setup Diagram (Charger mode)	
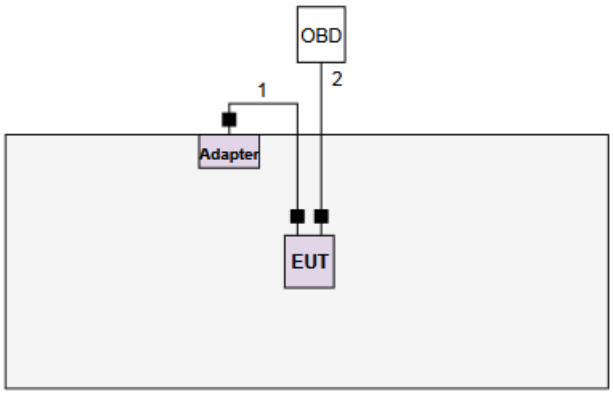	
No.	**Signal cable / Length (m)**
1	USB, 1m non-shielded with 2 cores.
2	RJ45, 1.7m non-shielded with 1 core.

Test Setup Diagram (TX mode)	
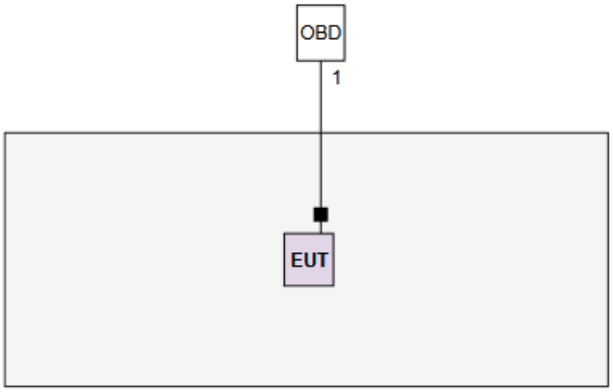	
No.	**Signal cable / Length (m)**
1	RJ45, 1.7m non-shielded with 1 core.

1.3 The Equipment List

Test Item	Radiated Emission				
Test Site	966 chamber1 / (03CH01-WS)				
Instrument	**Manufacturer**	**Model No.**	**Serial No.**	**Calibration Date**	**Calibration Until**
Spectrum Analyzer	R&S	FSV40	101498	Dec. 27, 2018	Dec. 26, 2019
Receiver	R&S	ESR3	101658	Dec. 11, 2018	Dec. 10, 2019
Bilog Antenna	SCHWARZBECK	VULB9168	VULB9168-522	Jul. 12, 2019	Jul. 11, 2020
Horn Antenna 1G-18G	SCHWARZBECK	BBHA 9120 D	BBHA 9120 D 1096	Dec. 18, 2018	Dec. 17, 2019
Horn Antenna 18G-40G	SCHWARZBECK	BBHA 9170	BBHA 9170517	Nov. 15, 2018	Nov. 14, 2019
Loop Antenna	R&S	HFH2-Z2	100330	Nov. 09, 2018	Nov. 08, 2019
Loop Antenna Cable	KOAX KABEL	101354-BW	101354-BW	Oct. 08, 2018	Oct. 07, 2019
Preamplifier	EMC	EMC02325	980225	Jul. 09, 2019	Jul. 08, 2020
Preamplifier	Agilent	83017A	MY39501308	Oct. 04, 2018	Oct. 03, 2019
Preamplifier	EMC	EMC184045B	980192	Aug. 01, 2019	Jul. 31, 2020
RF Cable	EMC	EMC104-SM-SM-8000	181106	Oct. 08, 2018	Oct. 07, 2019
RF Cable	HUBER+SUHNER	SUCOFLEX104	MY16019/4	Oct. 08, 2018	Oct. 07, 2019
RF Cable	HUBER+SUHNER	SUCOFLEX104	MY16014/4	Oct. 08, 2018	Oct. 07, 2019
LF cable 1M	EMC	EMCCFD400-NM-NM-1000	160502	Oct. 08, 2018	Oct. 07, 2019
LF cable 3M	Woken	CFD400NL-LW	CFD400NL-001	Oct. 08, 2018	Oct. 07, 2019
LF cable 10M	Woken	CFD400NL-LW	CFD400NL-002	Oct. 08, 2018	Oct. 07, 2019
Measurement Software	AUDIX	e3	6.120210g	NA	NA
Note: Calibration Interval of instruments listed above is one year.					

1.4 Test Standards

According to the specification of EUT, the EUT must comply with following standards and KDB documents.

47 CFR FCC Part 15.209
ANSI C63.10-2013

1.5 Deviation from Test Standard and Measurement Procedure

None

1.6 Measurement Uncertainty

ISO/IEC 17025 requires that an estimate of the measurement uncertainties associated with the emissions test results be included in the report. The measurement uncertainties given below are based on a 95% confidence level (based on a coverage factor (k=2)

Measurement Uncertainty	
Parameters	**Uncertainty**
AC conducted emission	±2.92 dB
Radiated emission ≤ 30MHz	±2.3 dB
Radiated emission > 30MHz	±3.41 dB

2 Test Configuration

2.1 Testing Condition

Test Item	Test Site	Ambient Condition	Tested By
AC Conduction	CO01-WS	23°C / 64%	Alex Tsai
Radiated Emissions	03CH01-WS	23-24°C / 63-64%	Akun Chung

- FCC Designation No.: TW2732
- FCC site registration No.: 181692
- ISED#: 10807A
- CAB identifier: TW2732

2.2 The Worst Test Modes and Channel Details

Test item	Modulation Mode	Test Frequency (kHz)	Test Configuration
AC Conducted Emissions	---	---	Charger mode
Radiated Emissions	---	---	Charger mode
	ASK	125	TX mode
NOTE: The EUT was pretested with 3 orientations placed on the table for the radiated emission measurement – X, Y, and Z-plane. The **X-plane** results were found as the worst case and were shown in this report			

3 Transmitter Test Results

3.1 Conducted Emissions

3.1.1 Limit of Conducted Emissions

Conducted Emissions Limit		
Frequency Emission (MHz)	**Quasi-Peak**	**Average**
0.15-0.5	66 - 56 *	56 - 46 *
0.5-5	56	46
5-30	60	50
Note 1: * Decreases with the logarithm of the frequency.		

3.1.2 Test Procedures

1. The device is placed on a test table, raised 80 cm above the reference ground plane. The vertical conducting plane is located 40 cm to the rear of the device.
2. The device is connected to line impedance stabilization network (LISN) and other accessories are connected to other LISN. Measured levels of AC power line conducted emission are across the 50 Ω LISN port.
3. AC conducted emission measurements is made over frequency range from 150 kHz to 30 MHz.
4. This measurement was performed with AC 120V / 60Hz.

3.1.3 Test Setup

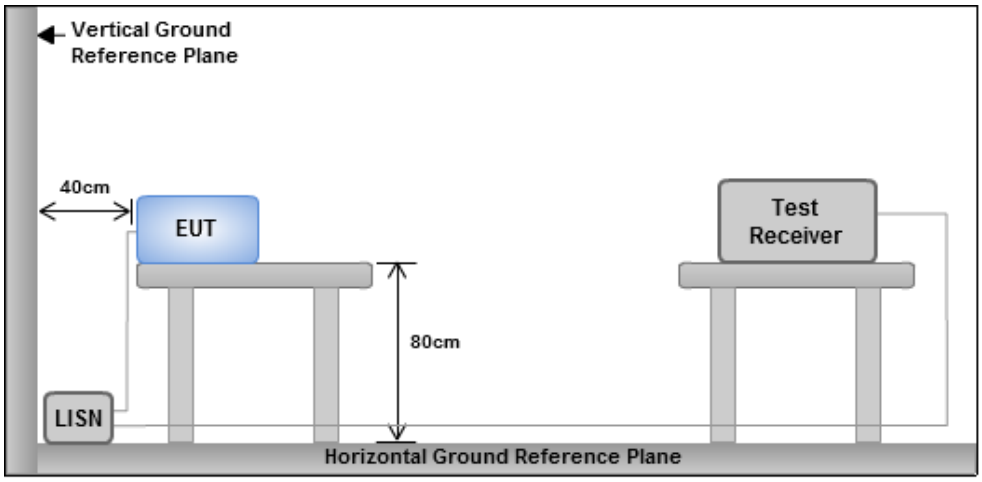

Note: 1. Support units were connected to second LISN.
2. Both of LISNs (AMN) are 80 cm from EUT and at least 80 cm from other units and other metal planes

Charger mode

3.1.4 Test Result of Conducted Emissions

Power Phase	Line

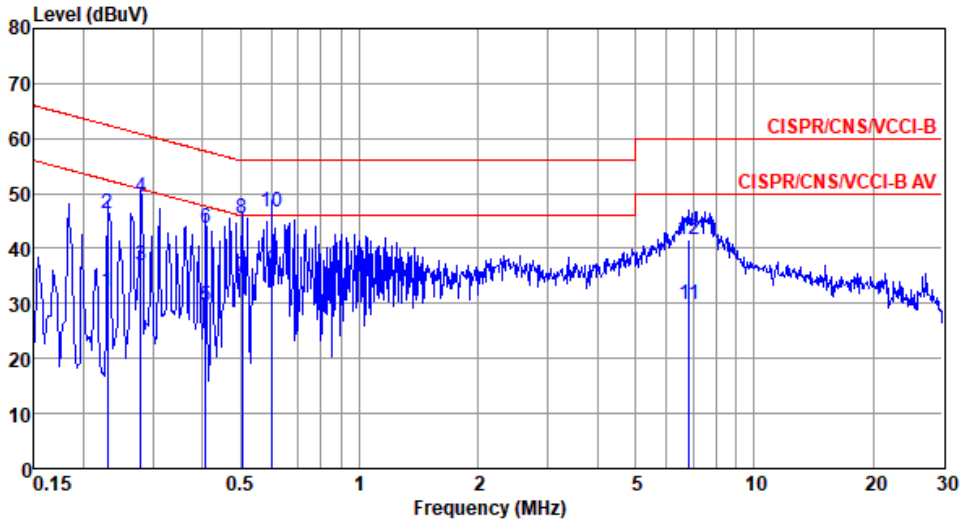

	Freq MHz	Level dBuV	Limit Line dBuV	Over Limit dB	Read Level dBuV	LISN factor dB	cable loss dB	Remark
1	0.230	32.18	52.44	-20.26	22.36	9.55	0.07	Average
2	0.230	46.26	62.44	-16.18	36.44	9.55	0.07	QP
3	0.279	36.91	50.85	-13.94	27.07	9.55	0.07	Average
4	0.279	49.25	60.85	-11.60	39.41	9.55	0.07	QP
5	0.408	29.63	47.68	-18.05	19.72	9.57	0.08	Average
6	0.408	43.60	57.68	-14.08	33.69	9.57	0.08	QP
7	0.505	34.93	46.00	-11.07	25.00	9.58	0.08	Average
8	0.505	45.47	56.00	-10.53	35.54	9.58	0.08	QP
9	0.601	36.06	46.00	-9.94	26.11	9.58	0.09	Average
10*	0.601	46.77	56.00	-9.23	36.82	9.58	0.09	QP
11	6.841	29.87	50.00	-20.13	19.48	9.63	0.37	Average
12	6.841	41.71	60.00	-18.29	31.32	9.63	0.37	QP

Note 1: Level (dBuV) = Read Level (dBuV) + LISN Factor (dB) + Cable Loss (dB).
2: Over Limit (dB) = Level (dBuV) – Limit Line (dBuV).

Power Phase	Neutral

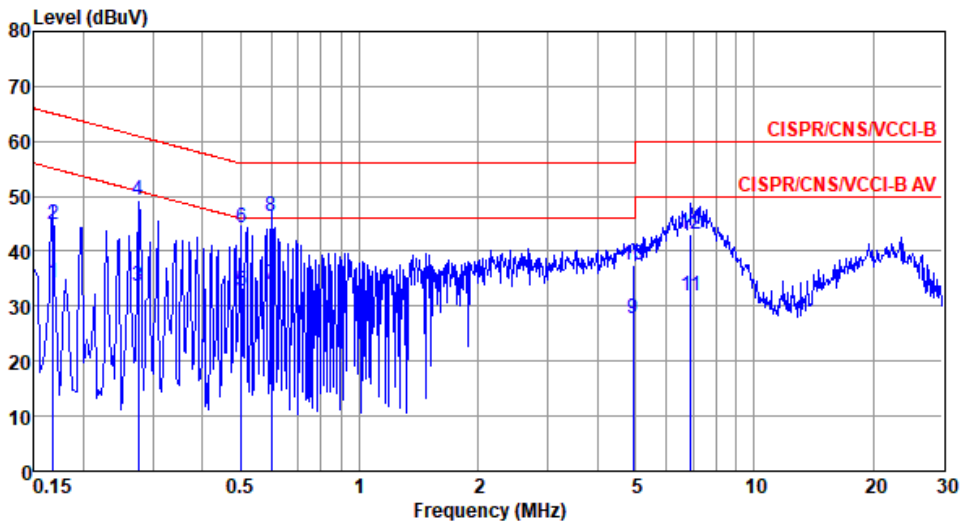

	Freq MHz	Level dBuV	Limit Line dBuV	Over Limit dB	Read Level dBuV	LISN factor dB	cable loss dB	Remark
1	0.168	34.27	55.08	-20.81	24.52	9.57	0.06	Average
2	0.168	44.90	65.08	-20.18	35.15	9.57	0.06	QP
3	0.276	33.64	50.94	-17.30	23.85	9.59	0.07	Average
4	0.276	49.24	60.94	-11.70	39.45	9.59	0.07	QP
5	0.502	32.82	46.00	-13.18	22.97	9.62	0.08	Average
6	0.502	44.25	56.00	-11.75	34.40	9.62	0.08	QP
7	0.598	34.02	46.00	-11.98	24.14	9.62	0.09	Average
8*	0.598	46.32	56.00	-9.68	36.44	9.62	0.09	QP
9	4.926	27.78	46.00	-18.22	17.52	9.67	0.32	Average
10	4.926	37.57	56.00	-18.43	27.31	9.67	0.32	QP
11	6.914	31.95	50.00	-18.05	21.61	9.69	0.37	Average
12	6.914	43.12	60.00	-16.88	32.78	9.69	0.37	QP

Note 1: Level (dBuV) = Read Level (dBuV) + LISN Factor (dB) + Cable Loss (dB).
2: Over Limit (dB) = Level (dBuV) – Limit Line (dBuV).

3.2 Radiated Emissions

3.2.1 Limit of Radiated Emissions

Restricted Band Emissions Limit			
Frequency Range (MHz)	**Field Strength (uV/m)**	**Field Strength (dBuV/m)**	**Measure Distance (m)**
0.009~0.490	2400/F(kHz)	48.5 - 13.8	300
0.490~1.705	24000/F(kHz)	33.8 - 23	30
1.705~30.0	30	29.54	30
30~88	100	40	3
88~216	150	43.5	3
216~960	200	46	3
Above 960	500	54	3

Note 1:
Qusai-Peak value is measured for frequency below 1GHz except for 9–90 kHz, 110–490 kHz frequency band. Peak and average value are measured for frequency above 1GHz. The limit on average radio frequency emission is as above table. The limit on peak radio frequency emissions is 20 dB above the maximum permitted average emission limit
Note 2:
Measurements may be performed at a distance other than what is specified provided. When performing measurements at a distance other than that specified, the results shall be extrapolated to the specified distance using an extrapolation factor as below, Frequency at or above 30 MHz: 20 dB/decade Frequency below 30 MHz: 40 dB/decade.

3.2.2 Test Procedures

1. Measurement is made at a semi-anechoic chamber that incorporates a turntable allowing a EUT rotation of 360°. A continuously-rotating, remotely-controlled turntable is installed at the test site to support the EUT and facilitate determination of the direction of maximum radiation for each EUT emission frequency. The EUT is placed at a height of 0.8 m test table above the ground plane.
2. Measurement is made with the antenna positioned in both the horizontal and vertical planes of polarization. The measurement antenna is varied in height (1m ~ 4m) above the reference ground plane to obtain the maximum signal strength. Distance between EUT and antenna is 3 m.
3. This investigation is performed with the EUT rotated 360°, the antenna height scanned between 1 m and 4 m, and the antenna rotated to repeat the measurements for both the horizontal and vertical antenna polarizations.

Note:

1. 120kHz measurement bandwidth of test receiver and Quasi-peak detector is for radiated emission below 1GHz.
2. Correction values between measurement form the semi-anechoic chamber and open-field test site have been confirmed and added to the factor.

3.2.3 Test Setup

Radiated Emissions below 30MHz

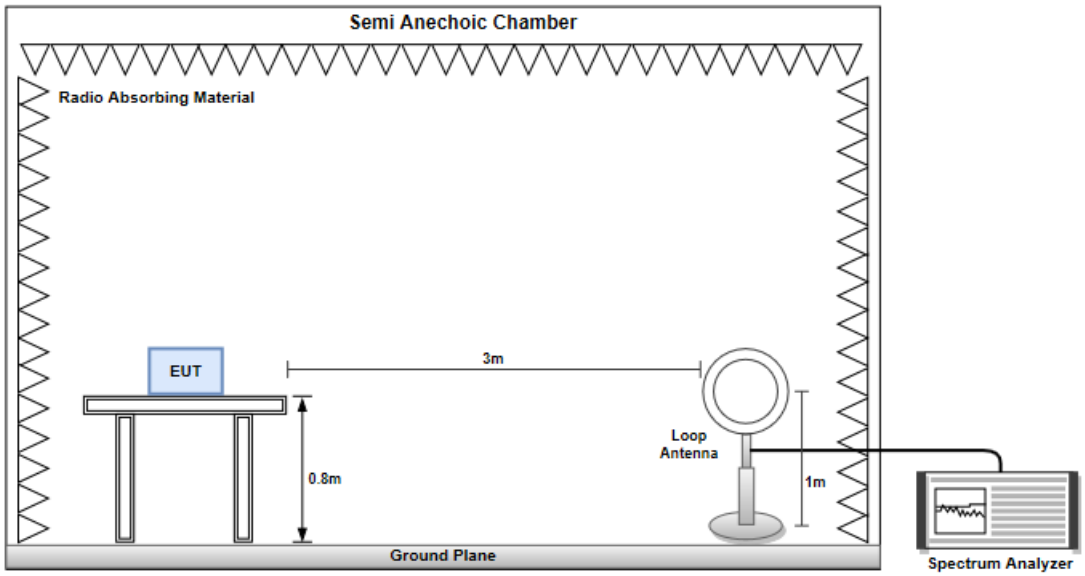

Radiated Emissions below 1 GHz

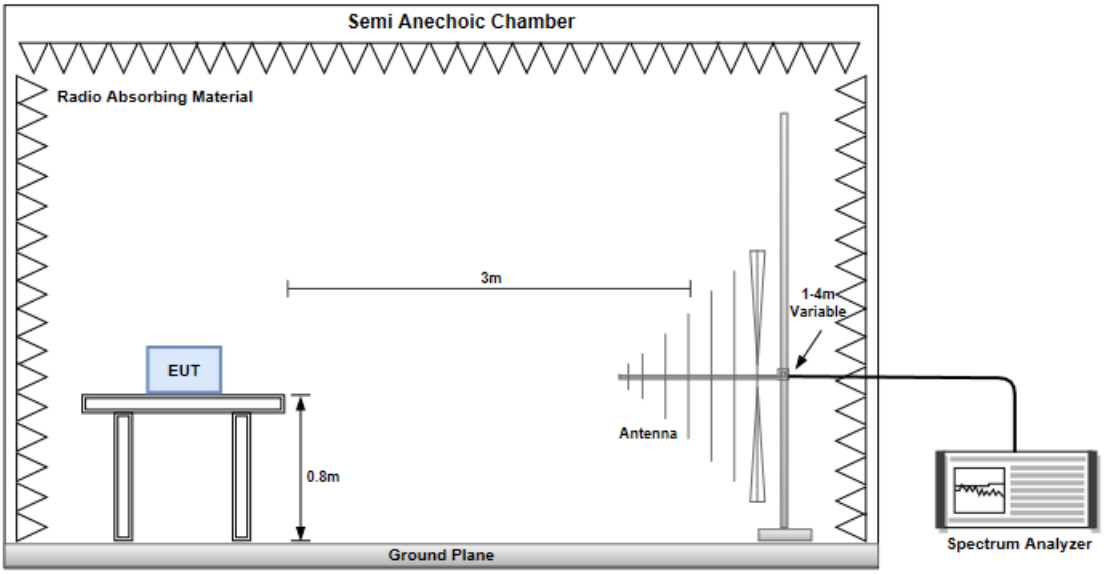

TX mode

3.2.4 Transmitter Radiated Unwanted Emissions (9kHz ~ 30MHz)

Polarization		Loop Open					
Frequency (MHz)		Emission Level dBuV/m	Limit (dBuV/m)	Margin (dB)	SA Reading (dBuV/m)	Factor	Remark
1	0.125	105.60	125.67	-20.07	83.62	21.98	PK
2	0.125	105.55	105.67	-0.12	83.57	21.98	AV
3	0.25	48.77	115.73	-66.96	27.10	21.67	PK
4	0.25	48.36	95.73	-47.37	26.69	21.67	AV
5	0.375	78.97	108.68	-29.71	57.48	21.49	PK
6	0.375	78.48	88.68	-10.20	56.99	21.49	AV
7	3.31	34.78	63.19	-28.41	14.33	20.45	QP

Polarization		Loop Close					
Frequency (MHz)		Emission Level dBuV/m	Limit (dBuV/m)	Margin (dB)	SA Reading (dBuV/m)	Factor	Remark
1	0.125	101.26	125.67	-24.41	79.28	21.98	PK
2	0.125	100.99	105.67	-4.68	79.01	21.98	AV
3	0.25	44.60	115.73	-71.13	22.93	21.67	PK
4	0.25	44.15	95.73	-51.58	22.48	21.67	AV
5	0.375	53.53	108.68	-55.15	32.04	21.49	PK
6	0.375	52.91	88.68	-35.77	31.42	21.49	AV
7	3.31	41.40	63.19	-21.79	20.95	20.45	QP

Note 1: Emission Level (dBuV/m) = SA Reading (dBuV/m) + Factor* (dB).
*Factor includes antenna factor and cable loss.
Note 2: Margin (dB) = Emission level (dBuV/m) – Limit (dBuV/m).

3.2.5 Transmitter Radiated Unwanted Emissions (Above 30MHz)

Polarization	Horizontal	Test Freq. (kHz)	125

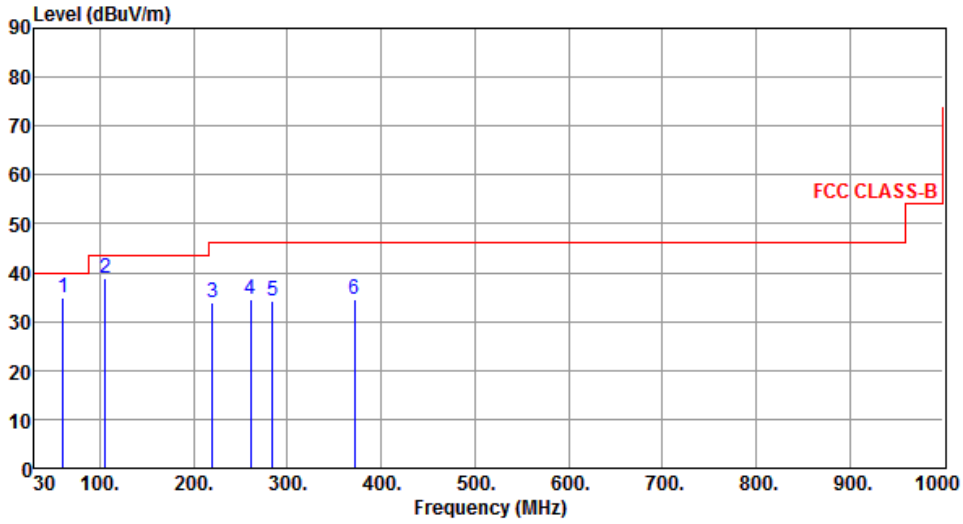

	Freq. MHz	Emission level dBuV/m	Limit dBuV/m	Margin dB	SA reading dBuV	Factor dB	Remark	ANT High cm	Turn Table deg
1	61.04	34.88	40.00	-5.12	44.01	-9.13	Peak	---	---
2	105.66	38.80	43.50	-4.70	50.94	-12.14	Peak	---	---
3	220.12	33.88	46.00	-12.12	45.92	-12.04	Peak	---	---
4	260.86	34.60	46.00	-11.40	44.22	-9.62	Peak	---	---
5	284.14	34.07	46.00	-11.93	42.57	-8.50	Peak	---	---
6	371.44	34.66	46.00	-11.34	40.84	-6.18	Peak	---	---

Note 1: Emission Level (dBuV/m) = SA Reading (dBuV/m) + Factor* (dB)
*Factor includes antenna factor , cable loss and amplifier gain
Note 2: Margin (dB) = Emission level (dBuV/m) – Limit (dBuV/m)

Polarization	Vertical	Test Freq. (kHz)	125

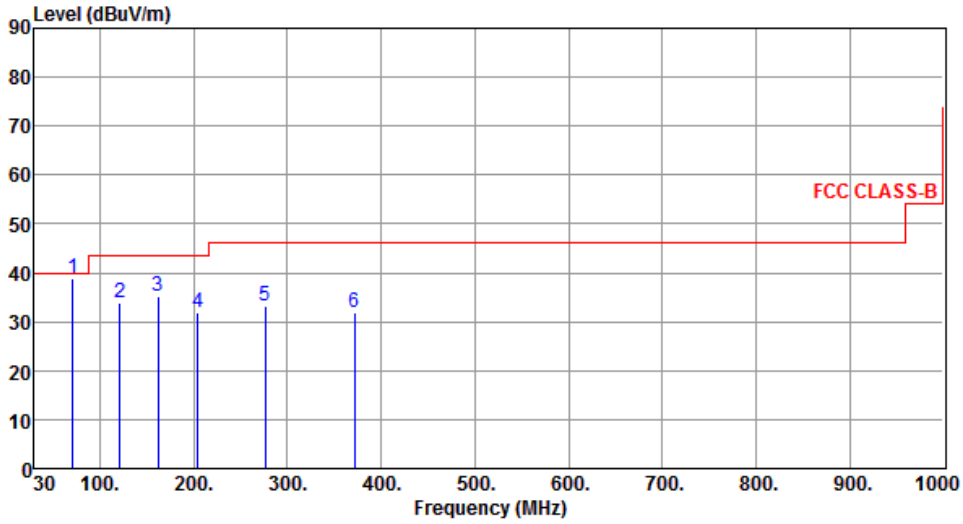

	Freq. MHz	Emission level dBuV/m	Limit dBuV/m	Margin dB	SA reading dBuV	Factor dB	Remark	ANT High cm	Turn Table deg
1	70.74	38.74	40.00	-1.26	49.58	-10.84	QP	100	4
2	121.18	33.96	43.50	-9.54	44.60	-10.64	Peak	---	---
3	161.92	35.12	43.50	-8.38	43.66	-8.54	Peak	---	---
4	204.60	31.97	43.50	-11.53	44.15	-12.18	Peak	---	---
5	276.38	33.08	46.00	-12.92	41.86	-8.78	Peak	---	---
6	371.44	31.73	46.00	-14.27	37.91	-6.18	Peak	---	---

Note 1: Emission Level (dBuV/m) = SA Reading (dBuV/m) + Factor* (dB)
*Factor includes antenna factor , cable loss and amplifier gain
Note 2: Margin (dB) = Emission level (dBuV/m) – Limit (dBuV/m)

Charger mode

3.2.6 Transmitter Radiated Unwanted Emissions (Above 30MHz)

Polarization	Horizontal

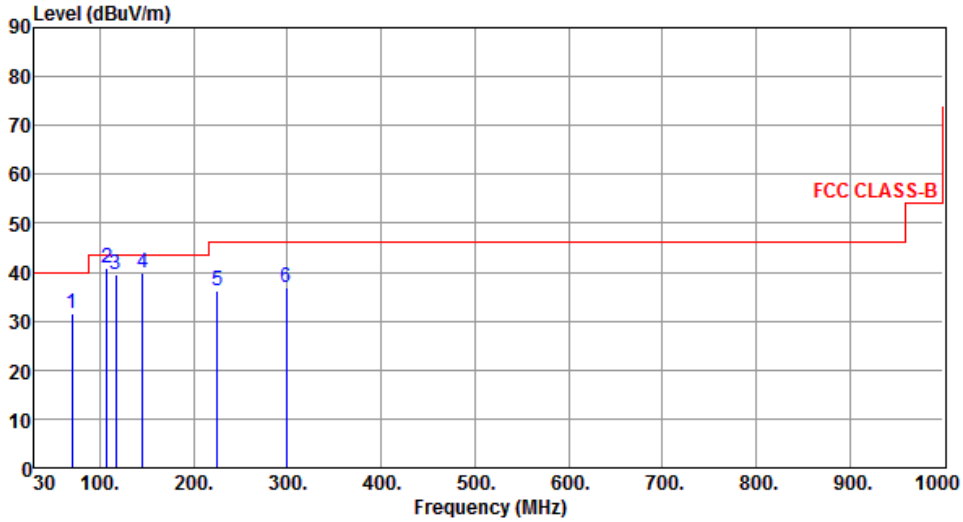

	Freq. MHz	Emission level dBuV/m	Limit dBuV/m	Margin dB	SA reading dBuV	Factor dB	Remark	ANT High cm	Turn Table deg
1	69.77	31.57	40.00	-8.43	42.29	-10.72	Peak	---	---
2	107.60	40.86	43.50	-2.64	52.80	-11.94	QP	292	88
3	116.70	39.61	43.50	-3.89	50.58	-10.97	QP	291	87
4	145.43	39.78	43.50	-3.72	48.46	-8.68	Peak	---	---
5	224.97	36.11	46.00	-9.89	48.23	-12.12	Peak	---	---
6	298.69	36.96	46.00	-9.04	45.09	-8.13	Peak	---	---

Note 1: Emission Level (dBuV/m) = SA Reading (dBuV/m) + Factor* (dB)
*Factor includes antenna factor , cable loss and amplifier gain
Note 2: Margin (dB) = Emission level (dBuV/m) – Limit (dBuV/m)

Polarization	Vertical

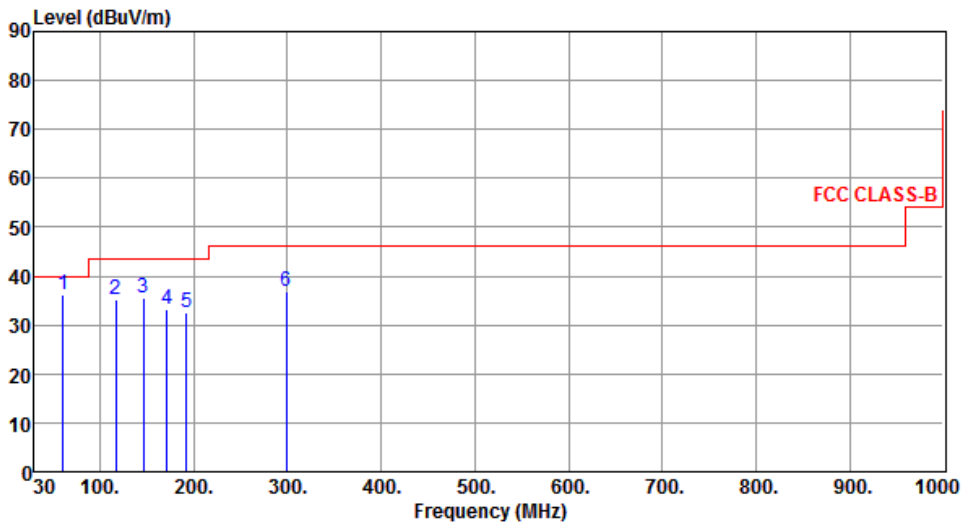

	Freq. MHz	Emission level dBuV/m	Limit dBuV/m	Margin dB	SA reading dBuV	Factor dB	Remark	ANT High cm	Turn Table deg
1	61.04	36.29	40.00	-3.71	45.42	-9.13	Peak	---	---
2	117.30	35.35	43.50	-8.15	46.23	-10.88	Peak	---	---
3	146.40	35.64	43.50	-7.86	44.22	-8.58	Peak	---	---
4	171.62	33.32	43.50	-10.18	42.44	-9.12	Peak	---	---
5	191.99	32.70	43.50	-10.80	44.22	-11.52	Peak	---	---
6	298.69	36.97	46.00	-9.03	45.10	-8.13	Peak	---	---

Note 1: Emission Level (dBuV/m) = SA Reading (dBuV/m) + Factor* (dB)
*Factor includes antenna factor , cable loss and amplifier gain
Note 2: Margin (dB) = Emission level (dBuV/m) – Limit (dBuV/m)

4 Test laboratory information

Established in 2012, ICC provides foremost EMC & RF Testing and advisory consultation services by our skilled engineers and technicians. Our services employ a wide variety of advanced edge test equipment and one of the widest certification extents in the business.

International Certification Corp (EMC and Wireless Communication Laboratory), it is our definitive objective is to institute long term, trust-based associations with our clients. The expectation we set up with our clients is based on outstanding service, practical expertise and devotion to a certified value structure. Our passion is to grant our clients with best EMC / RF services by oriented knowledgeable and accommodating staff.

Our Test sites are located at Linkou District and Kwei Shan District. Location map can be found on our website http://www.icertifi.com.tw.

Linkou	**Kwei Shan**	**Kwei Shan Site II**
Tel: 886-2-2601-1640	Tel: 886-3-271-8666	Tel: 886-3-271-8640
No. 30-2, Ding Fwu Tsuen, Lin Kou District, New Taipei City, Taiwan, R.O.C.	No. 3-1, Lane 6, Wen San 3rd St., Kwei Shan District, Tao Yuan City 333, Taiwan, R.O.C.	No. 14-1, Lane 19, Wen San 3rd St., Kwei Shan District, Tao Yuan City 333, Taiwan, R.O.C.

If you have any suggestion, please feel free to contact us as below information.

Tel: 886-3-271-8666
Fax: 886-3-318-0155
Email: ICC_Service@icertifi.com.tw

═END═