MCU

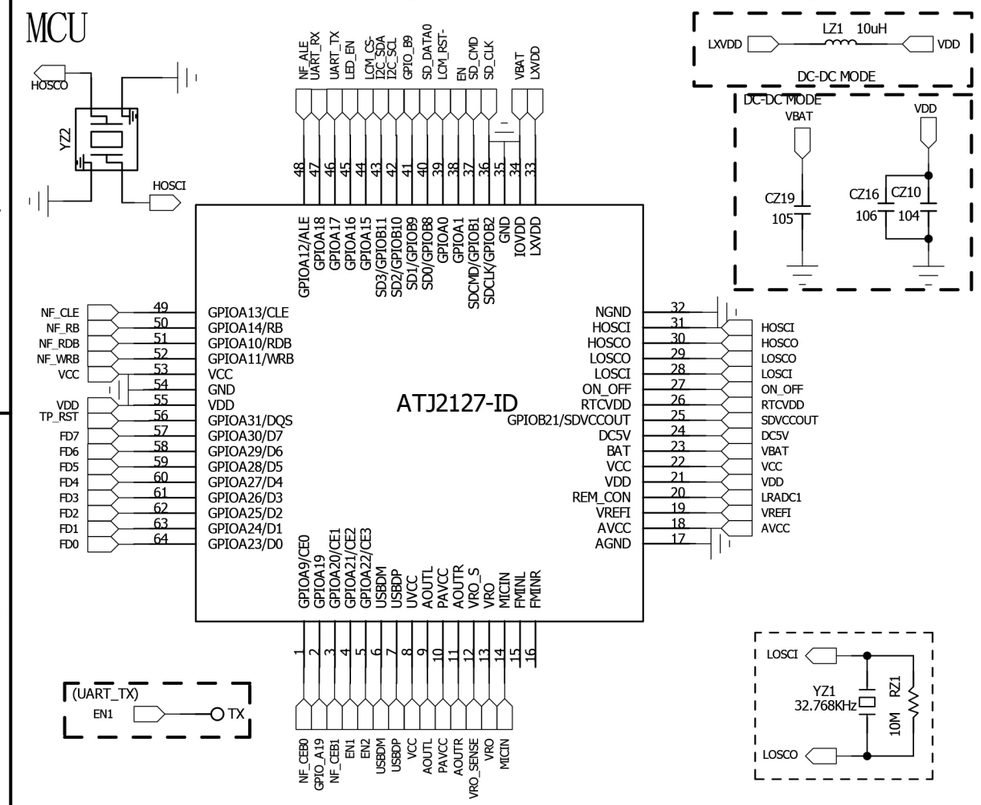

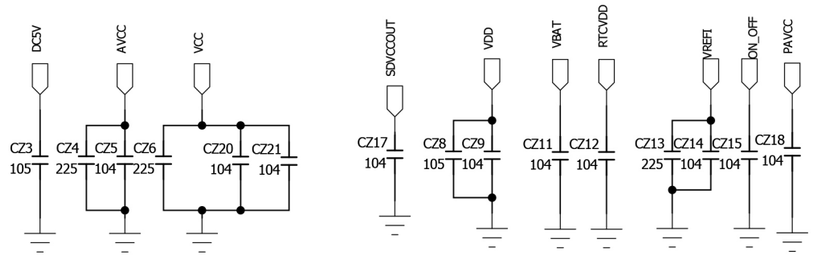

by-pass capacitors

(1) CZ18=104 in direct drive mode(OCL)
CZ18=106 in no direct drive mode(OTL)

(2) If EMI is OK,CZ4 and CZ6 can be 225

(3) If audio noise is OK,CZ13 can be 225

Nand Flash

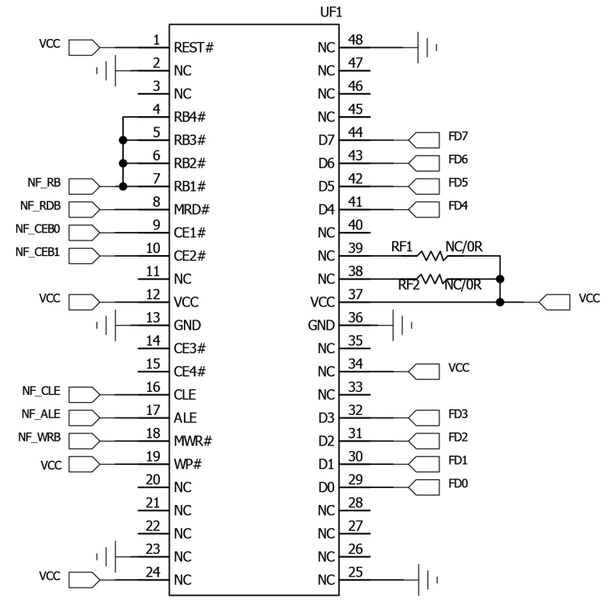

Flash PFE13

RF48 must paste according as nandflash's SPEC

RF1&RF2 CONNECT OR NOT DEPEND ON THE FLASH MODE WE ADOPT

For common flash,RF1&RF2 NC.

For special mode flash,connect RF1&RF2 as follows:

(1)Toshiba MLC,TLC flash need connect RF2 and not connect RF1

(2)Samsung's 27nm FLASH(K9GBG08UXA) need connect RF2 and not connect RF1

(3)Samsung's 34nm and 25nm(include <25nm) need connect RF1 and not connect RF2

(4)MIRCON or Intel MLC,TLC Flash need connect RF1 and not connect RF2

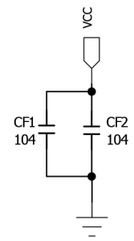

RF25 must paste according as nandflash's SPEC

USB & charger Module

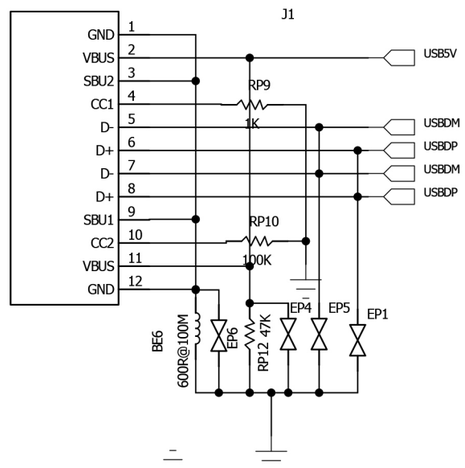

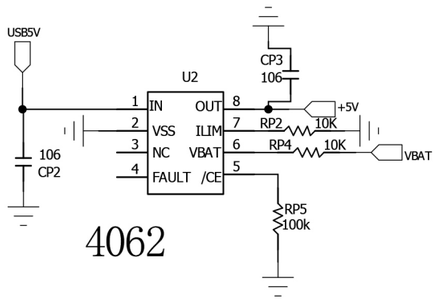

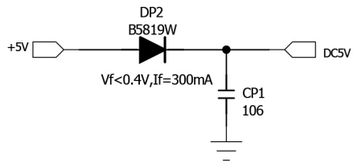

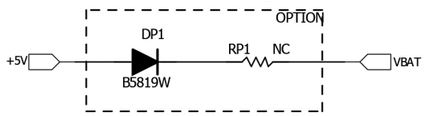

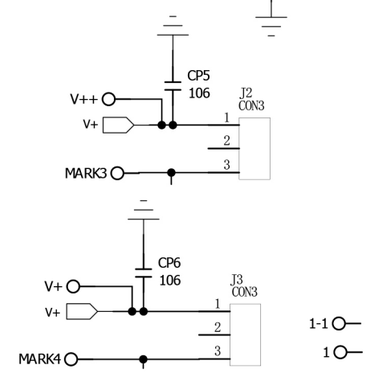

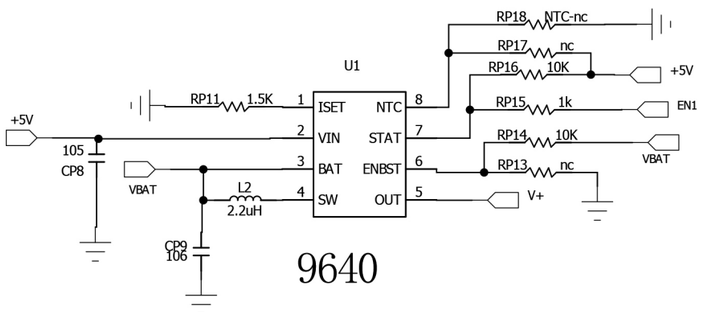

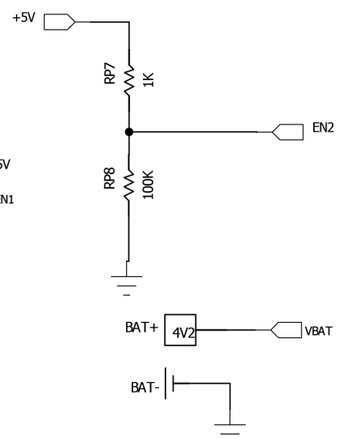

Remark: B1+ and B2+ is for TWS Headphone of battery

KEY Module

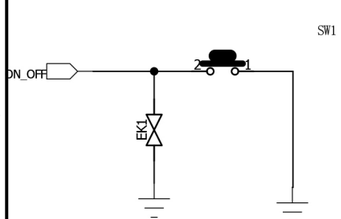

TF NC

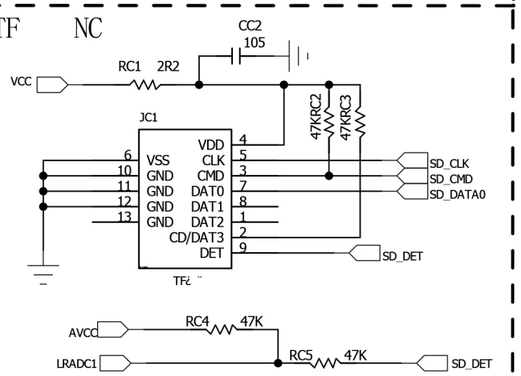

BACKLIGHT

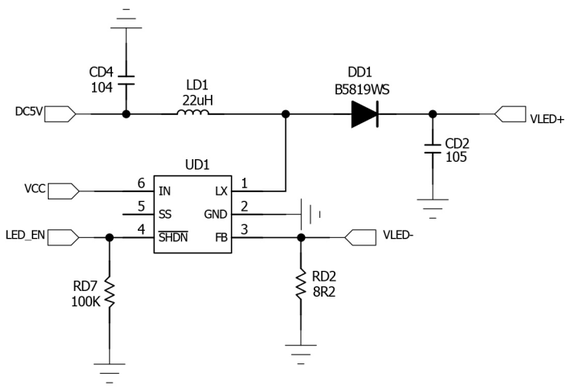

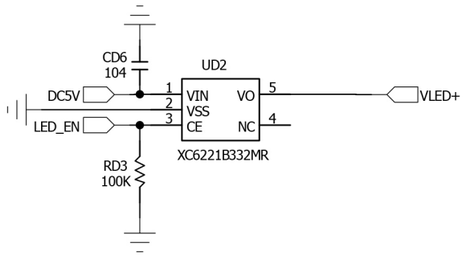

LCD & TCP connector

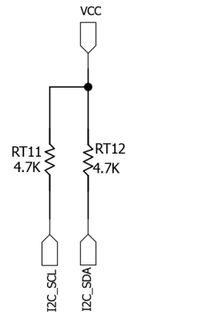

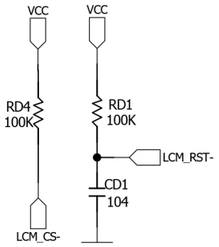

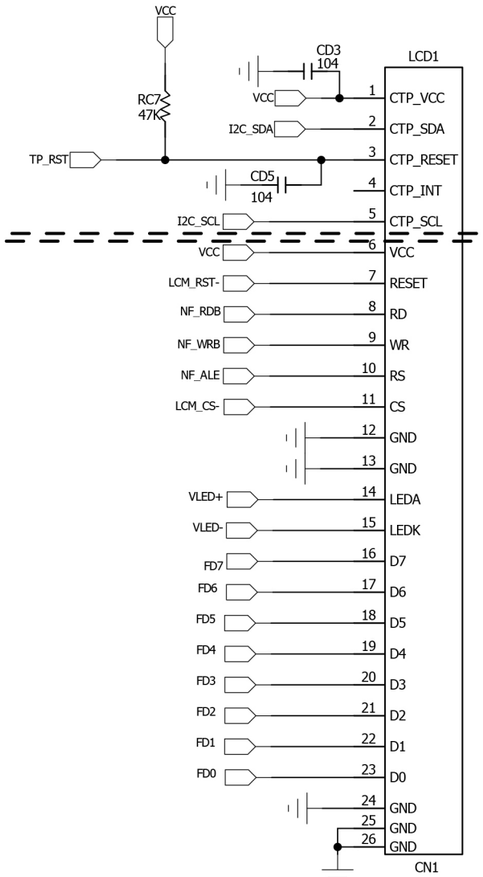

2.0 TCP

2.0 TFT

ANALOG MODULE

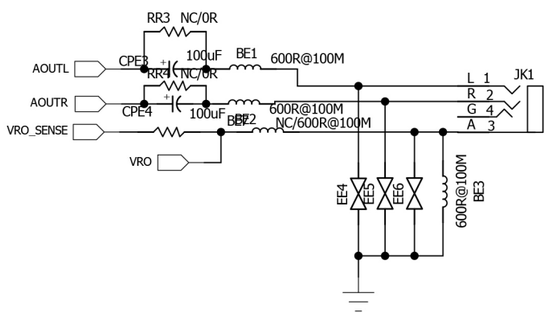

MIC

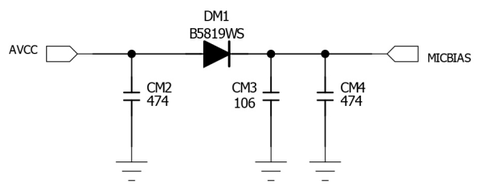

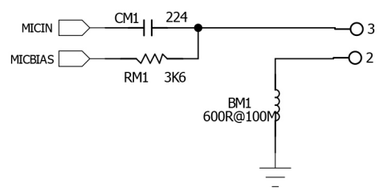

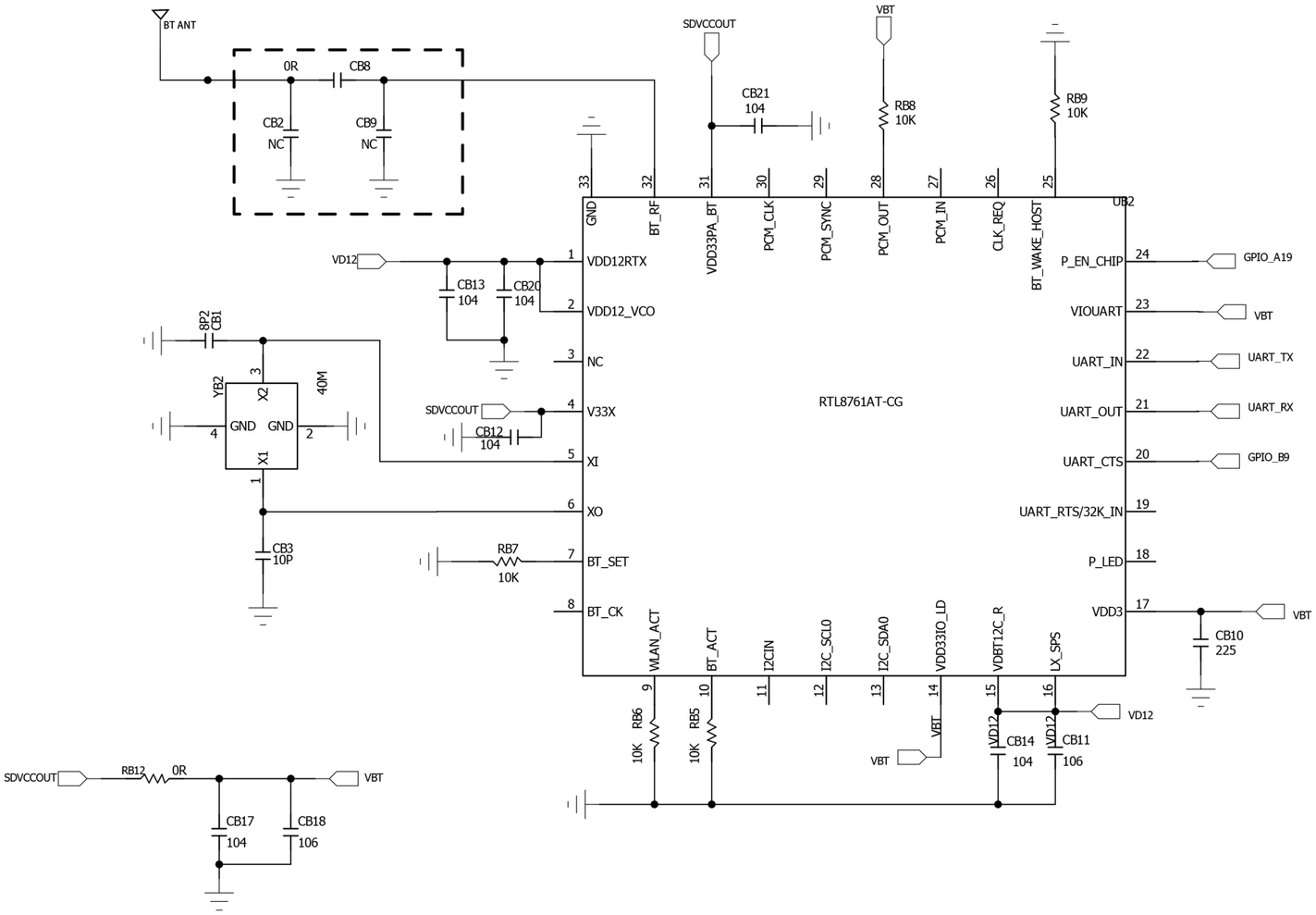
BT ANT
0R
CB8
CB2
NC
CB9
NC
SDVCCOUT
CB21
104
VBT
RB8
10K
RB9
10K
UB2
RTL8761AT-CG
GND
BT_RF
VDD33PA_BT
PCM_CLK
PCM_SYNC
PCM_OUT
PCM_IN
CLK_REQ
BT_WAKE_HOST
VD12
CB13
104
CB20
104
VDD12RTX
VDD12_VCO
NC
V33X
XI
XO
BT_SET
BT_CK
P_EN_CHIP
VIOUART
UART_IN
UART_OUT
UART_CTS
UART_RTS/32K_IN
P_LED
VDD3
GPIO_A19
VBT
UART_TX
UART_RX
GPIO_B9
CB10
225
8P2
CB1
YB2
X2
40M
GND
GND
X1
CB3
10P
SDVCCOUT
CB12
104
RB7
10K
WLAN_ACT
BT_ACT
I2CIN
I2C_SCL0
I2C_SDA0
VDD33IO_LD
VDBT12C_R
LX_SPS
RB6
10K
RB5
10K
VBT
VD12
CB14
104
CB11
106
SDVCCOUT
RB12
0R
VBT
CB17
104
CB18
106