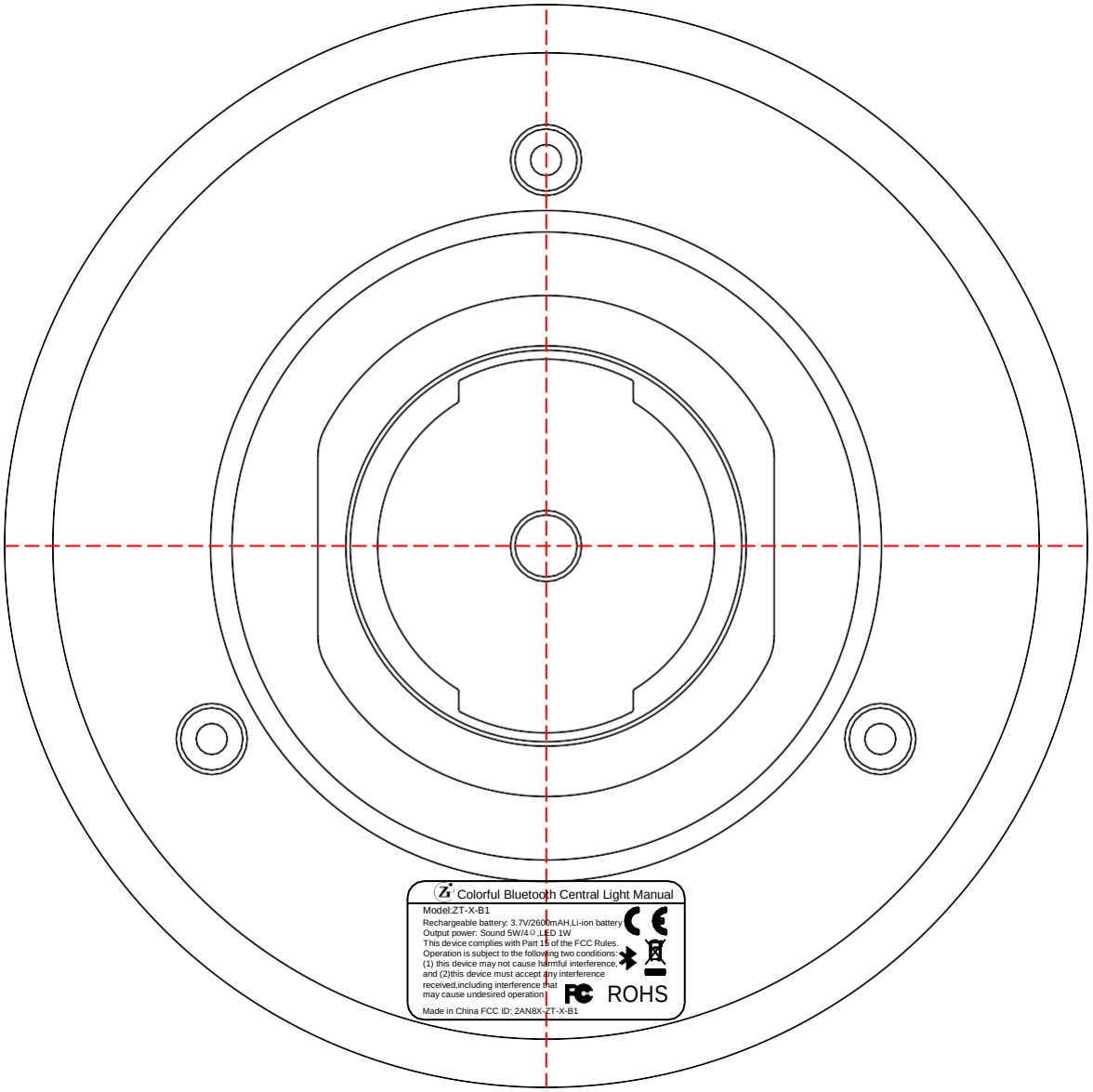
Colorful Bluetooth Central Light Manual
Model:ZT-X-B1
Rechargeable battery: 3.7V/2600mAH,Li-ion battery
Output power: Sound 5W/4Ω,LED 1W
This device complies with Part 15 of the FCC Rules.
Operation is subject to the following two conditions:
(1) this device may not cause harmful interference,
and (2)this device must accept any interference
received,including interference that
may cause undesired operation
ROHS
Made in China FCC ID: 2AN8X-ZT-X-B1

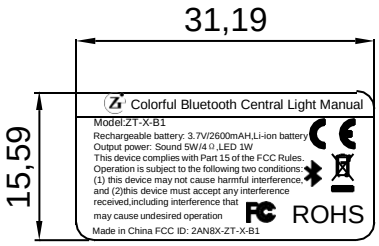
31,19
15,59
Colorful Bluetooth Central Light Manual
Model:ZT-X-B1
Rechargeable battery: 3.7V/2600mAH,Li-ion battery
Output power: Sound 5W/4Ω,LED 1W
This device complies with Part 15 of the FCC Rules.
Operation is subject to the following two conditions:
(1) this device may not cause harmful interference,
and (2)this device must accept any interference
received,including interference that
may cause undesired operation
ROHS
Made in China FCC ID: 2AN8X-ZT-X-B1