ZFX TECH	SHENZHEN ZFX Technology Co.,Ltd.			THREE ANGLE PROJECTION	A4 SIZE
	DRAWN BY:	DATE	REV.	ZP-GHP30-Pi5D 镭雕-FC-RX	
	匡思剑	2023/02/06	A		

WEB www.zfxtech.cn 100%

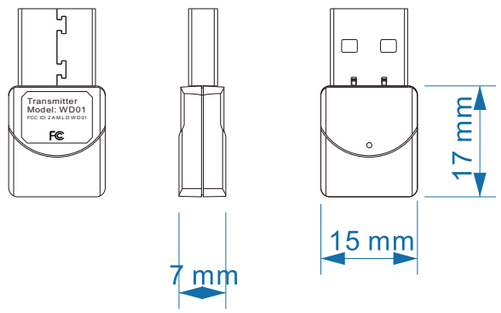

100%

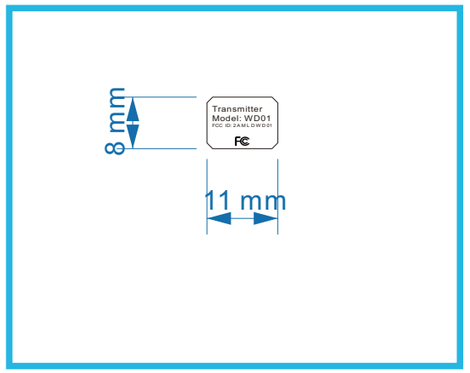

LASER PRINT（镭雕）