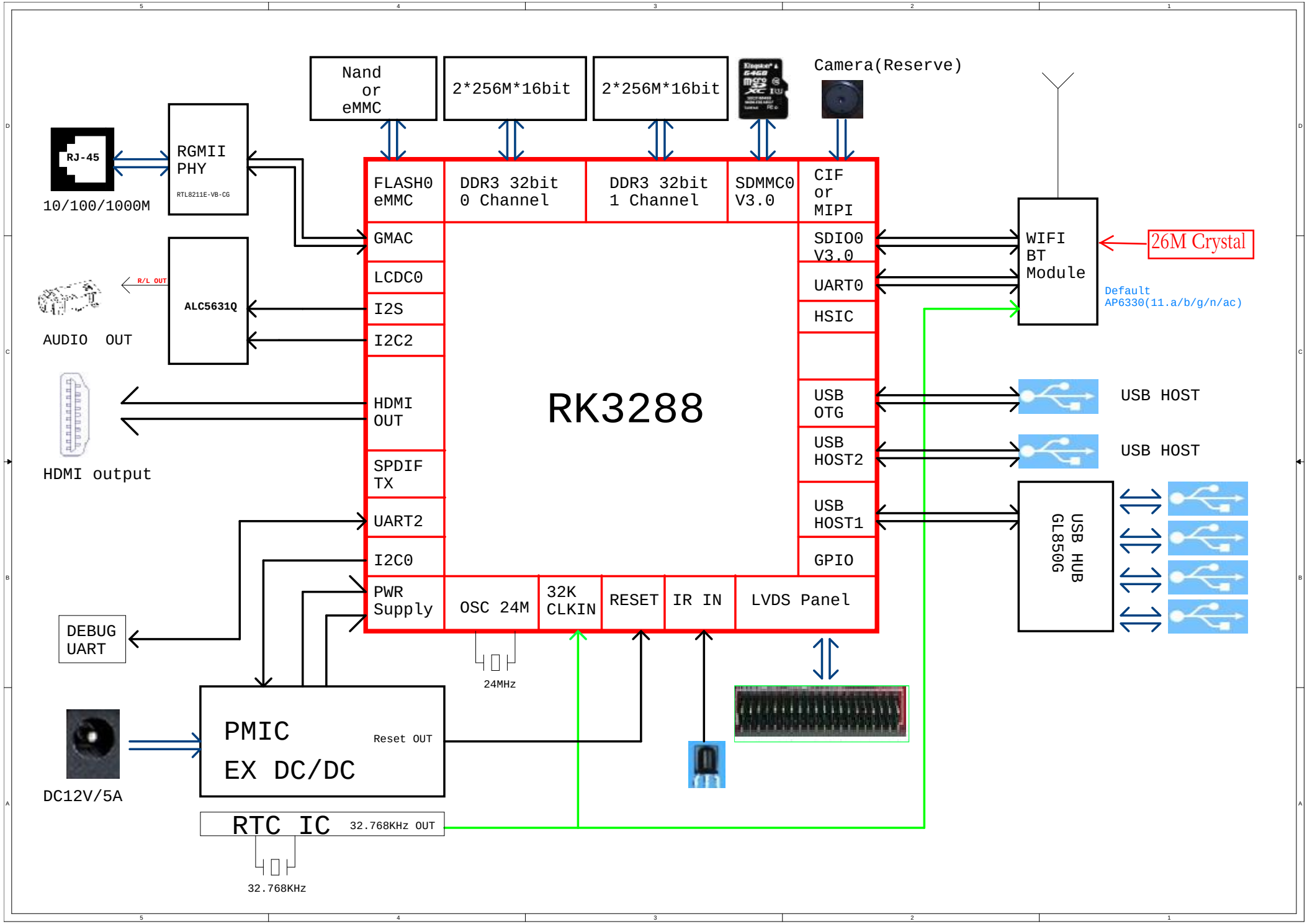
Nand or eMMC
2*256M*16bit
2*256M*16bit
Camera(Reserve)
RJ-45
10/100/1000M
RGMII PHY
RTL8211E-VB-CG
FLASH0 eMMC
DDR3 32bit 0 Channel
DDR3 32bit 1 Channel
SDMMC0 V3.0
CIF or MIPI
GMAC
LCDC0
I2S
I2C2
HDMI OUT
SPDIF TX
UART2
I2C0
PWR Supply
OSC 24M
32K CLKIN
RESET
IR IN
LVDS Panel
SDIO0 V3.0
UART0
HSIC
USB OTG
USB HOST2
USB HOST1
GPIO
RK3288
WIFI BT Module
26M Crystal
Default AP6330(11.a/b/g/n/ac)
R/L OUT
ALC5631Q
AUDIO OUT
HDMI output
USB HOST
USB HOST
USB HUB GL850G
DEBUG UART
24MHz
PMIC
EX DC/DC
Reset OUT
DC12V/5A
RTC IC
32.768KHz OUT
32.768KHz