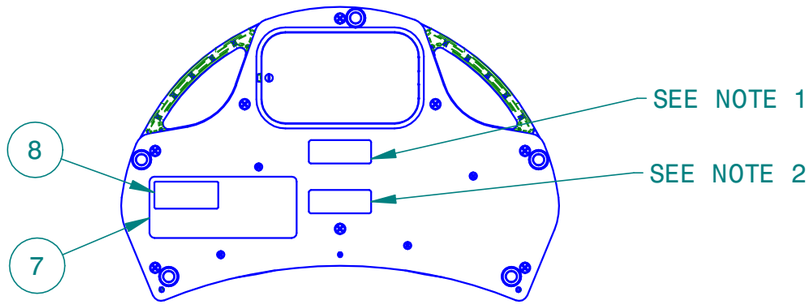

UNDERSIDE OF FOOTSWITCH SHOWING
SERIAL LABEL POSITION LABEL
1: 5

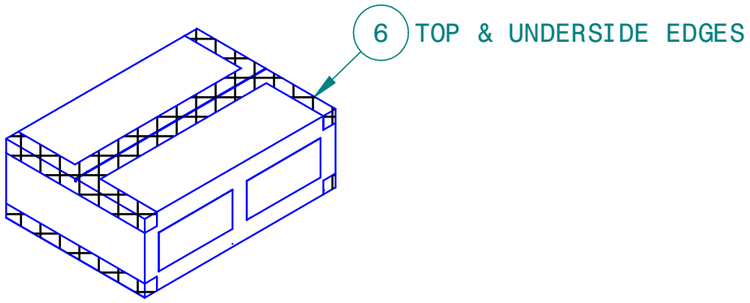

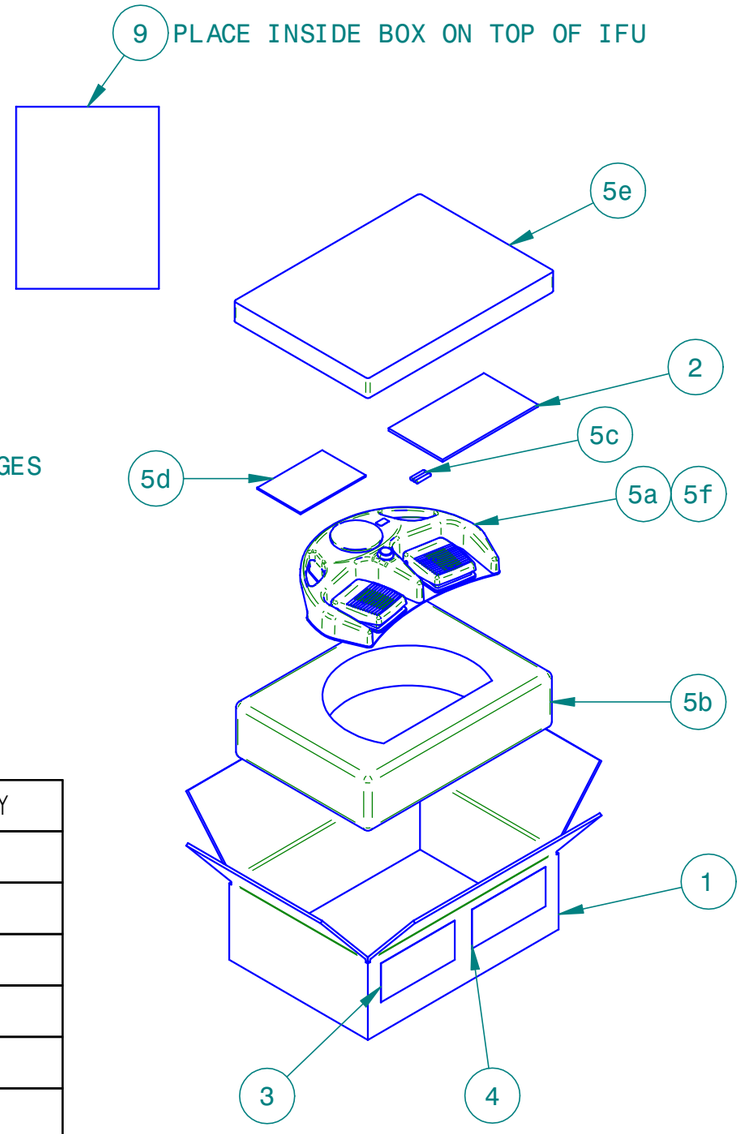

ITEM	PART No.	DESCRIPTION	QTY
1	192050	PACKING CARTON (BOX) FOOTSWITCH	1
2	192055	IFU WIRELESS FOOTSWITCH	1
3	192052	MULTILINGUAL PACKING LABEL	1
4	192051	PACKING BOX LABEL	1
5a	PN0011189	WIRELESS FOOTSWITCH	1
5b	192167 (904-T9-4)	BOTTOM INSERT (ORIGINAL PACKAGING)	1
5c	192167 (904-P9)	AA BATTERY KIT (ORIGINAL PACKAGING)	1
5d	192167 (908-B8)	O-RING KIT (ORIGINAL PACKAGING)	1
5e	192167 (904-T9-1)	TOP PAD (ORIGINAL PACKAGING)	1
5f	192167 (LSC-375-14)	POLY BAG (ORIGINAL PACKAGING)	1
6	064027	SELLOTAPE 50mm x 66M REF	AS REQD
7	192164	LABEL - WIRELESS FOOTSWITCH	1
8	PN0010408	LOT NUMBER LABEL WIRELESS (225214)	1
9	PN0012203	DECLARATION OF CONFORMITY	1

NOTES

1. SUPPLIER SERIAL NUMBER LABEL APPLIED BY THE SIUPPLIER
2. FCC ID LABEL APPLIED BY THE SUPPLIER

DRAWING REVISIONS

ISSUE 01. CO- 111088 INITIAL RELEASE.

ISSUE AA. CO- 112220
ITEM 5C WAS 064160 (904-T9-4) UPPER INSERT - NOW REMOVED. SUBSEQUENT ITEMS RE-NUMBERED. ITEMS 5a - 5f PART NUMBER 192167 WAS PART NUMBER 064160. ITEM 7-SERIAL LABEL ADDED, VEIW ADDED SHOWING SERIAL LABEL POSITION.
R. HUMBLE 03-JUN-2010

REV AB. CO-124628
ITEM 7 - SERIAL LABEL MOVED FROM RIGHT SIDE TO LEFT SIDE OF FOOTSWITCH (A1).
DRAWN: R. HUMBLE 22-OCT-2012

REV AC. CO-312858
UPDATED TO ADD REFERENCE TO NEW LOT NUMBER LABEL WIRELESS (225214). ITEM 8 ADDED TO PART LIST (F1). PICTORIAL UPDATE AND ITEM 8 BALLOON ADDED (A1). DECLARATION OF CONFORMITY (ITEM 9) ADDED.
DRAWN: G. PRICE 01-JUN-2017

REV AD. CO-316727
UPDATED TO ADD NOTE LEGENDS AND NOTES TABLE. REMOVAL OF CE MARK FROM ITEM 7 (192164 LABEL). WIRELESS FOOTSWITCH 192167 UPDATED TO PN0011189
DRAWN: M. WOODHAM 30-NOV-2017

MATERIAL
N/A

FINISH
CLEAN AND FREE FROM VISIBLE PARTICULATES

DRAWN R. HUMBLE 06-JAN-2010

IF IN DOUBT ASK
REFER TO BS 8888:2011 | 3RD ANGLE

DIMENSIONS IN MILLIMETRES [INCH]
TOLERANCE, UNLESS SPECIFIED
X ± 0.2 [.008"] X.X ± 0.1 [.004"]
X.XX(X) ± 0.05 [.002"] ANGLES ± 0.5°

SIZE A3
SCALE 1:10
UNLESS SPECIFIED

OLYMPUS
Your Vision, Our Future

© GYRUS MEDICAL LTD
Fortran Road, St Mellons, Cardiff. UK. CF3 0LT
Tel: +44 (0)29 2077 6300 Fax: +44 (0)29 2077 6301
Copyright in this drawing, and the design right in any article shown in the drawing are the property of Gyrus Medical Ltd.
Information given is confidential and should not be disclosed to any third party without prior written permission of Gyrus Medical Ltd.

DESCRIPTION
FPA - WIRELESS FOOTSWITCH
VAPR SP

SHEET 1 of 1 | PART No 292032 | REV AD