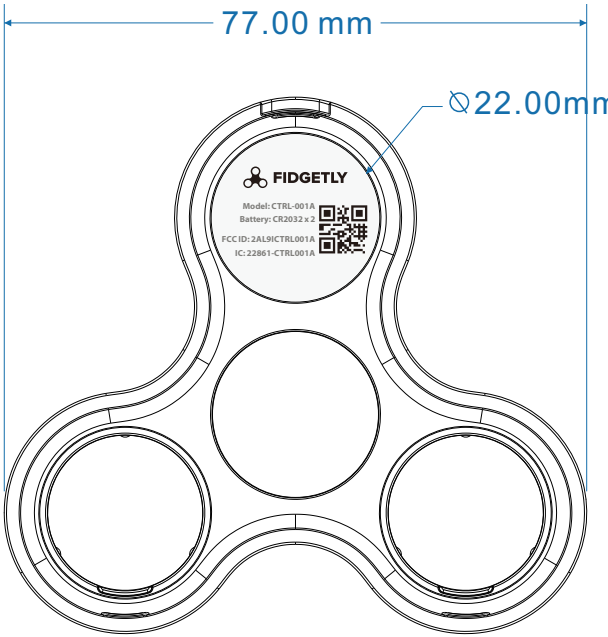


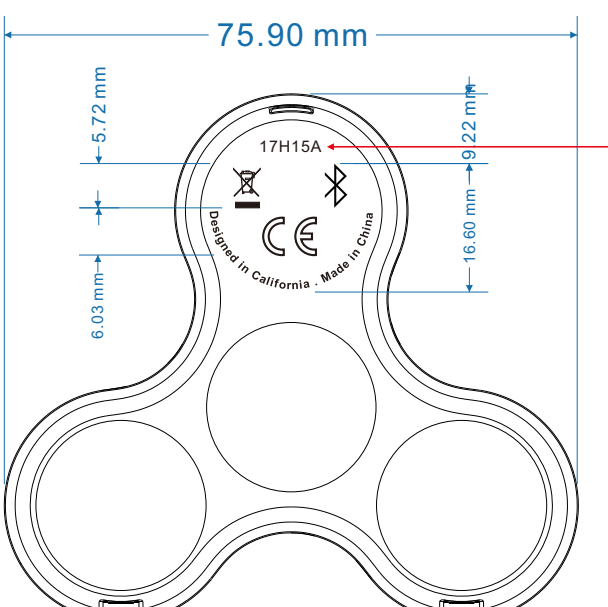


Laser artwork for battery door
Scale 1:1
2017.06.23