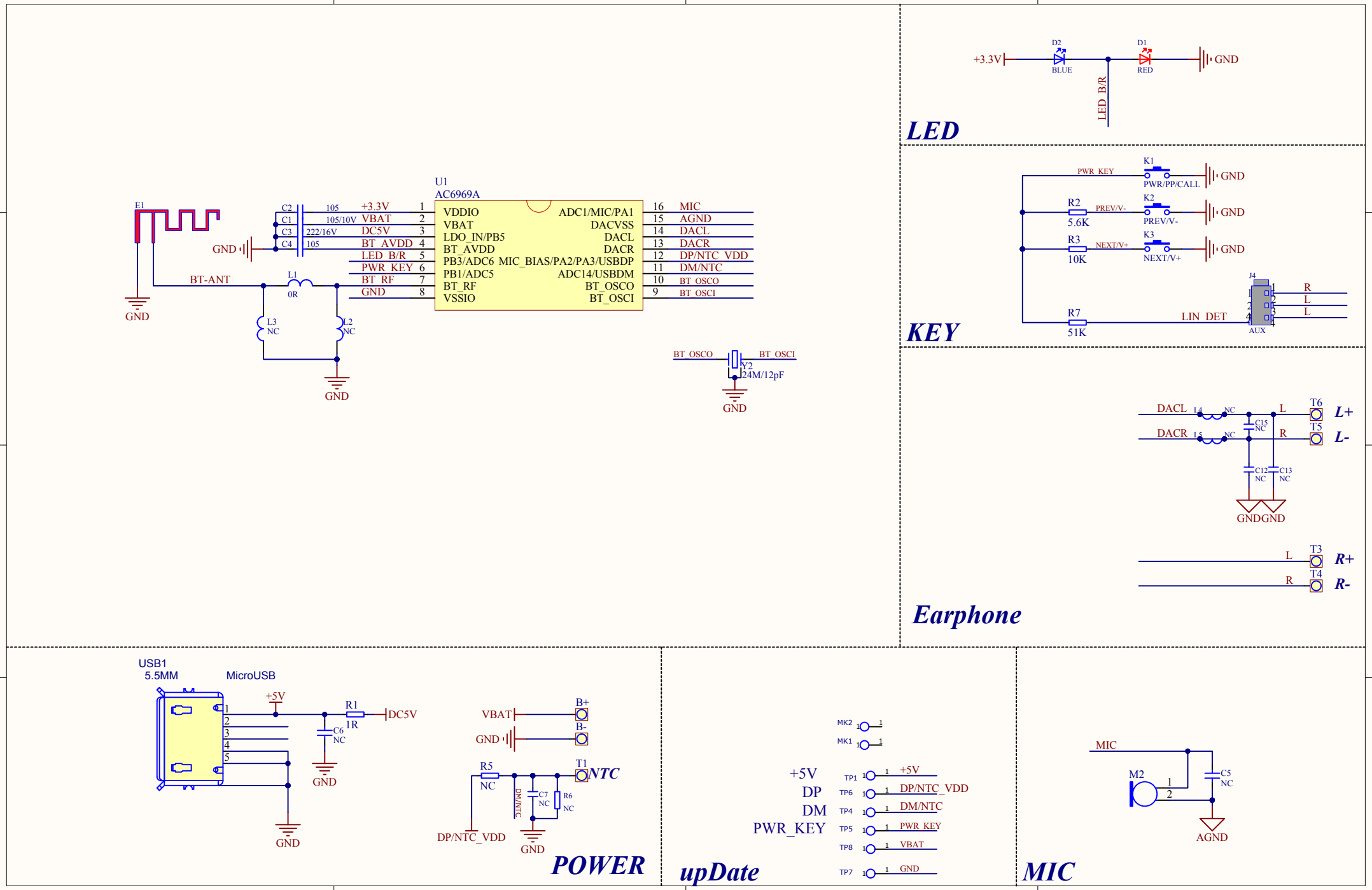
U1
AC6969A
VDDIO
VBAT
LDO_IN/PB5
BT_AVDD
PB3/ADC6 MIC_BIAS/PA2/PA3/USBDP
PB1/ADC5
BT_RF
VSSIO
ADC1/MIC/PA1
DACVSS
DACL
DACR
DP/NTC_VDD
DM/NTC
ADC14/USBDM
BT_OSCO
BT_OSCI
MIC
AGND
+3.3V
VBAT
DC5V
BT_AVDD
LED_B/R
PWR_KEY
GND
BT-ANT
E1
L1
0R
L3
NC
L2
NC
Y2
24M/12pF
LED
D2
BLUE
D1
RED
KEY
K1
PWR/PP/CALL
K2
PREV/V-
K3
NEXT/V+
R2
5.6K
R3
10K
R7
51K
LIN_DET
J4
AUX
Earphone
DACL
DACR
L4
L5
C15
NC
C12
NC
C13
NC
T6
T5
L+
L-
T3
T4
R+
R-
USB1
5.5MM
MicroUSB
+5V
R1
1R
C6
NC
DC5V
VBAT
B+
B-
R5
NC
T1
NTC
C7
NC
R6
NC
DP/NTC_VDD
POWER
MK2
MK1
+5V
DP
DM
PWR_KEY
TP1
TP6
TP4
TP5
TP8
TP7
upDate
MIC
M2
C5
NC
AGND
MIC