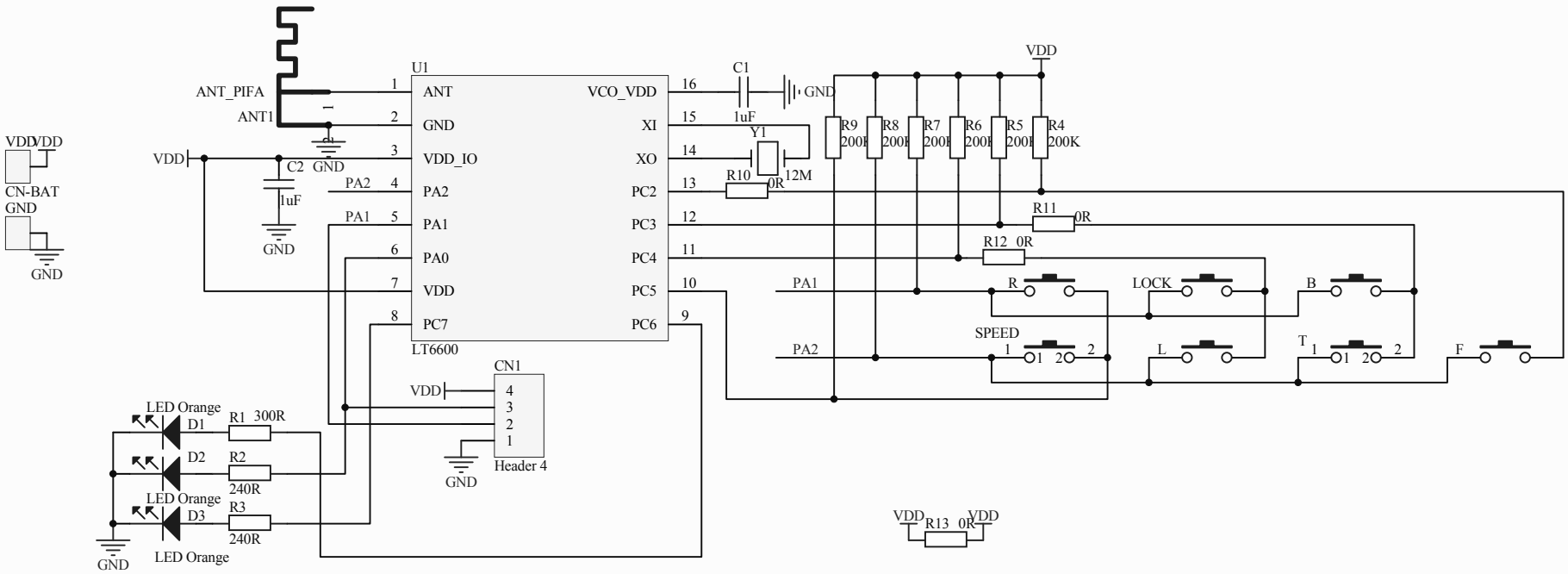

Title		
Size A4	Number	Revision
Date: 2017-05-17		Sheet of
File: D:\TEST\YK RC02 V1.1.SchDoc		Drawn By: