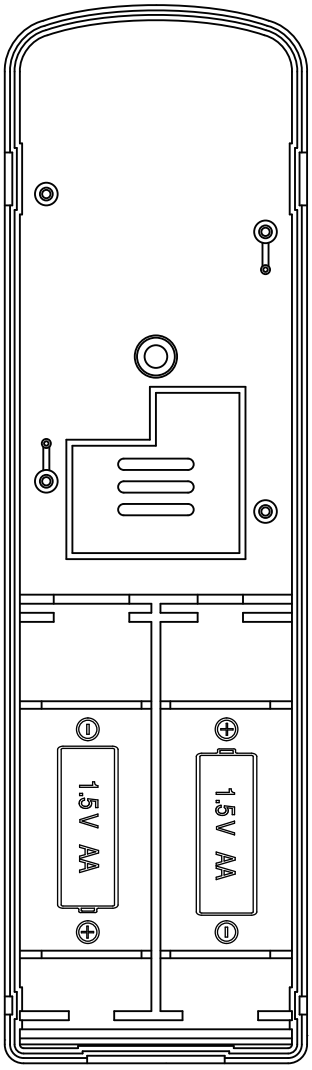
1.5V AA
1.5V AA

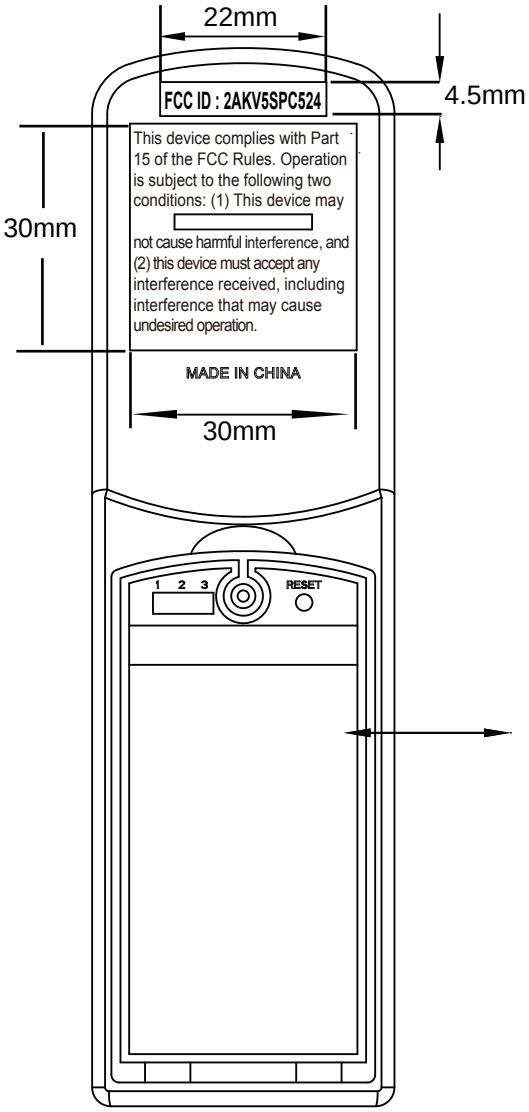
22mm
4.5mm
FCC ID : 2AKV5SPC524
This device complies with Part 15 of the FCC Rules. Operation is subject to the following two conditions: (1) This device may not cause harmful interference, and (2) this device must accept any interference received, including interference that may cause undesired operation.
30mm
MADE IN CHINA
30mm
1 2 3
RESET

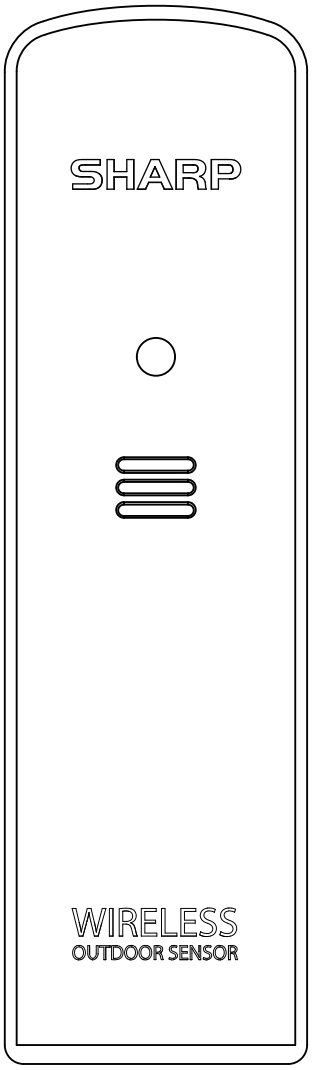
SHARP
WIRELESS
OUTDOOR SENSOR

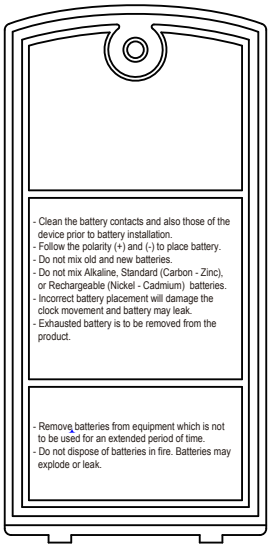
- Clean the battery contacts and also those of the device prior to battery installation.
- Follow the polarity (+) and (-) to place battery.
- Do not mix old and new batteries.
- Do not mix Alkaline, Standard (Carbon - Zinc), or Rechargeable (Nickel - Cadmium) batteries.
- Incorrect battery placement will damage the clock movement and battery may leak.
- Exhausted battery is to be removed from the product.
- Remove batteries from equipment which is not to be used for an extended period of time.
- Do not dispose of batteries in fire. Batteries may explode or leak.

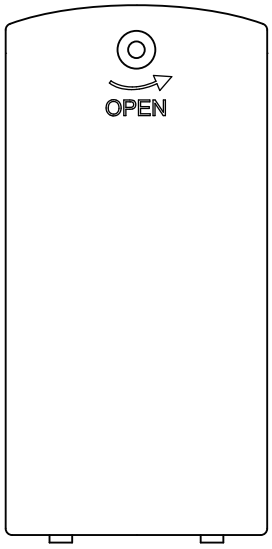
OPEN