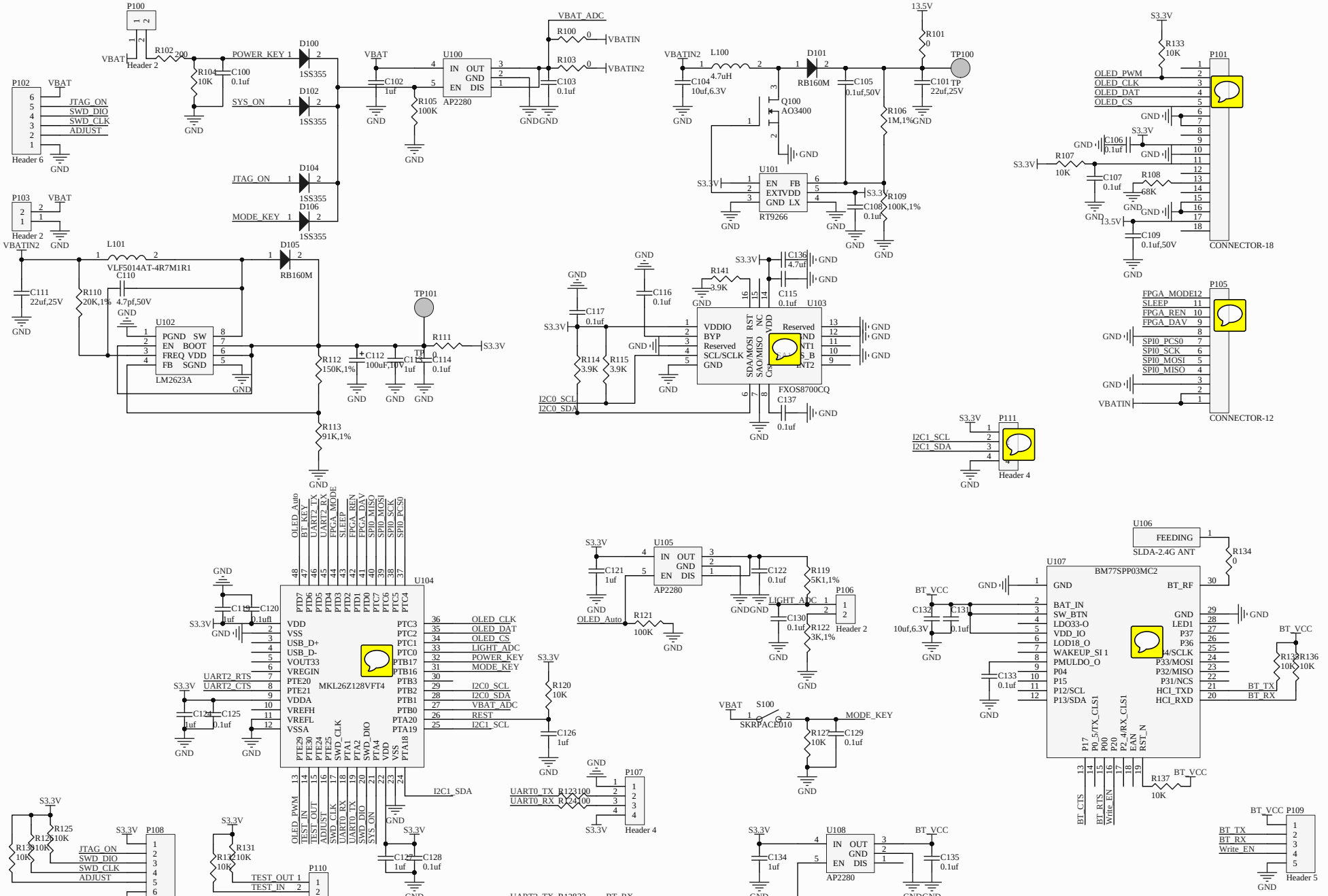
P100
VBAT
Header 2
R102 200
POWER_KEY
D100
1SS355
R104 10K
C100 0.1uf
GND
P102
JTAG_ON
SWD_DIO
SWD_CLK
ADJUST
Header 6
SYS_ON
D102
JTAG_ON
D104
MODE_KEY
D106
P103
Header 2
VBATIN2
L101
VLF5014AT-4R7M1R1
D105
RB160M
C111 22uf,25V
R110 20K,1%
C110 4.7pf,50V
U102
PGND SW
EN BOOT
FREQ VDD
FB SGND
LM2623A
TP101
R111
S3.3V
R112 150K,1%
C112 100uf,10V
C113 1uf
C114 0.1uf
R113 91K,1%
C102 1uf
R105 100K
U100
IN OUT
GND
EN DIS
AP2280
VBAT_ADC
R100 0
VBATIN
R103 0
VBATIN2
C103 0.1uf
13.5V
R101 0
TP100
VBATIN2
L100
4.7uH
C104 10uf,6.3V
D101
RB160M
C105 0.1uf,50V
C101 TP 22uf,25V
Q100
AO3400
R106 1M,1%
U101
EN FB
EXTVDD
GND LX
RT9266
C108 0.1uf
R109 100K,1%
S3.3V
R133 10K
P101
OLED_PWM
OLED_CLK
OLED_DAT
OLED_CS
C106 0.1uf
R107 10K
C107 0.1uf
R108 68K
C109 0.1uf,50V
CONNECTOR-18
C136 4.7uf
C115 0.1uf
U103
R141 3.9K
C116 0.1uf
C117 0.1uf
VDDIO
BYP
Reserved
SCL/SCLK
GND
SDA/MOSI
SAO/MISO
CS
RST
NC
VDD
Reserved
GND
INT1
VDD_B
INT2
R114 3.9K
R115 3.9K
I2C0_SCL
I2C0_SDA
FXOS8700CQ
C137 0.1uf
P105
FPGA_MODE
SLEEP
FPGA_REN
FPGA_DAV
SPI0_PCS0
SPI0_SCK
SPI0_MOSI
SPI0_MISO
VBATIN
CONNECTOR-12
P111
I2C1_SCL
I2C1_SDA
Header 4
U104
MKL26Z128VFT4
VDD
VSS
USB_D+
USB_D-
VOUT33
VREGIN
PTE20
PTE21
VDDA
VREFH
VREFL
VSSA
PTC3
PTC2
PTC1
PTC0
PTB17
PTB16
PTB3
PTB2
PTB1
PTB0
PTA20
PTA19
OLED_CLK
OLED_DAT
OLED_CS
LIGHT_ADC
POWER_KEY
MODE_KEY
I2C0_SCL
I2C0_SDA
VBAT_ADC
REST
I2C1_SCL
UART2_RTS
UART2_CTS
C124 1uf
C125 0.1uf
R120 10K
C126 1uf
I2C1_SDA
C127 1uf
C128 0.1uf
U105
AP2280
C121 1uf
R121 100K
OLED_Auto
C122 0.1uf
R119 5K1,1%
P106
LIGHT_ADC
C130 0.1uf
R122 3K,1%
Header 2
S100
SKRPACE010
MODE_KEY
R127 10K
C129 0.1uf
U106
FEEDING
SLDA-2.4G ANT
R134 0
U107
BM77SPP03MC2
GND
BAT_IN
SW_BTN
LDO33-O
VDD_IO
LOD18_O
WAKEUP_SI 1
PMULDO_O
P04
P15
P12/SCL
P13/SDA
BT_RF
LED1
P37
P36
P34/SCLK
P33/MOSI
P32/MISO
P31/NCS
HCI_TXD
HCI_RXD
P17
P0_5/TX_CLS1
P00
P20
P2_4/RX_CLS1
EAN
RST_N
BT_CTS
BT_RTS
Write_EN
BT_TX
BT_RX
C132 10uf,6.3V
C131 0.1uf
C133 0.1uf
R135 10K
R136 10K
R137 10K
P108
R125 10K
R126 10K
R130 10K
JTAG_ON
SWD_DIO
SWD_CLK
ADJUST
Header 6
R131 10K
R132 10K
TEST_OUT
TEST_IN
P110
Header 2
P107
UART0_TX
UART0_RX
R123 100
R124 100
Header 4
U108
AP2280
C134 1uf
C135 0.1uf
BT_KEY
R138 100K
P109
BT_TX
BT_RX
Write_EN
Header 5
UART2_TX
UART2_RX
R128 33
R129 33
BT_RX
BT_TX
UART2_RTS
UART2_CTS
R130 33
R140 33
BT_CTS
BT_RTS
Title
Size
A3
Number
Revision
Date: 2015/12/2
Sheet of
File: F:\LRF\..\MCU_V1.7.schdoc
Drawn By: