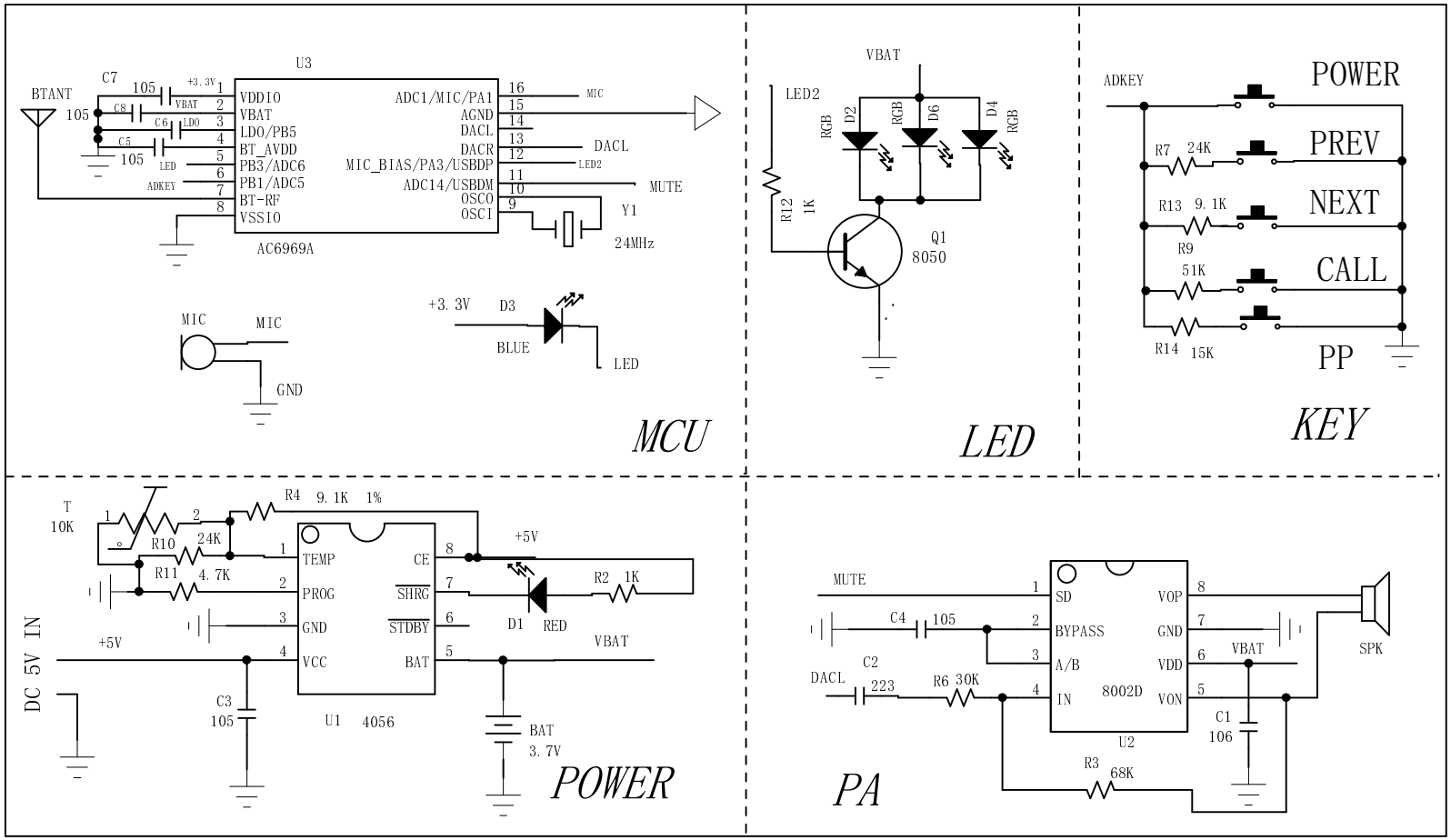
U3
BTANT
C7
105
+3.3V
VBAT
C8
C6
LDO
C5
LED
ADKEY
VDDIO
VBAT
LDO/PB5
BT_AVDD
PB3/ADC6
PB1/ADC5
BT-RF
VSSIO
ADC1/MIC/PA1
AGND
DACL
DACR
MIC_BIAS/PA3/USBDP
ADC14/USBDM
OSCO
OSCI
MIC
DACL
LED2
MUTE
Y1
24MHz
AC6969A
MIC
GND
+3.3V
D3
BLUE
LED
MCU
VBAT
LED2
RGB
D2
D6
D4
R12
1K
Q1
8050
LED
ADKEY
POWER
R7
24K
PREV
R13
9.1K
R9
51K
NEXT
CALL
R14
15K
PP
KEY
T
10K
R10
24K
R11
4.7K
R4
9.1K
1%
TEMP
PROG
GND
VCC
CE
SHRG
STDBY
BAT
+5V
R2
1K
D1
RED
VBAT
DC 5V IN
C3
105
U1
4056
BAT
3.7V
POWER
MUTE
SD
BYPASS
A/B
IN
VOP
GND
VDD
VON
8002D
U2
C4
105
C2
223
DACL
R6
30K
VBAT
C1
106
SPK
R3
68K
PA