REVISIONS			
REV.	ECN#	DESCRIPTION	DATE
A	N/A	NEW LSSUE	2016.01.26

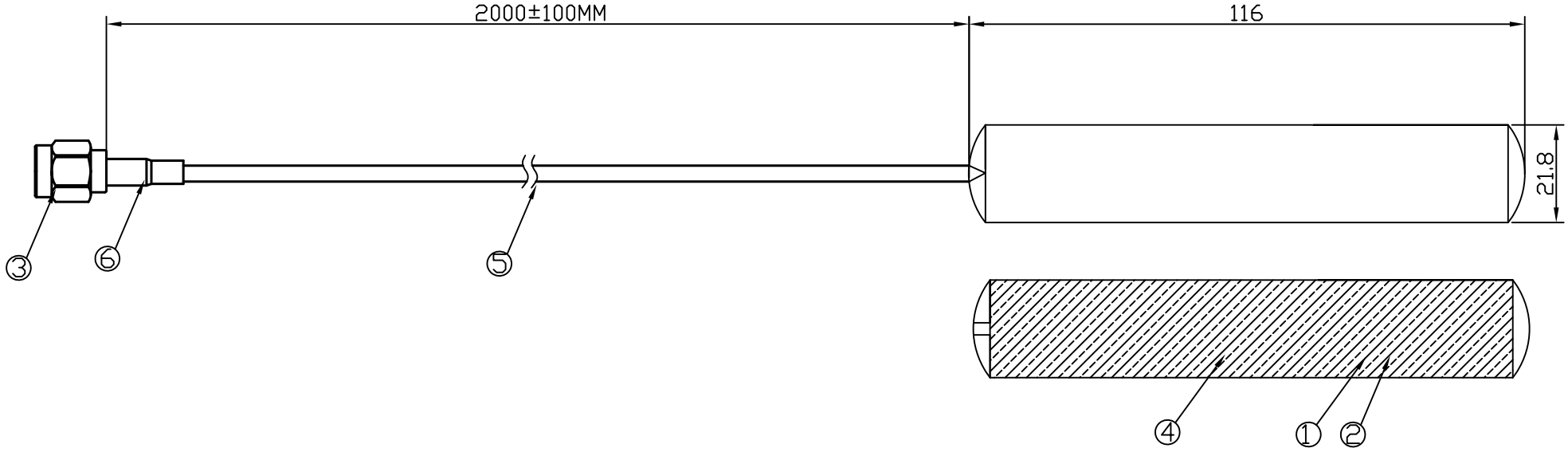

ELECTRONIC TEST CONDITION:
Frequency:698~960&1710~2700MHz(2G/3G/4G/LTE)
Impedance:50Ω
VSWR:≤2.0
GAIN: 1.5

ITEM	TITLE	DESCRIPTION	QTY
⑥	TUBE	HEAT SHRINK TUBE 4.0*20mm	1PC
⑤	CABLE	RG174 BLACK CABLE OR EQUIVALENT	1PC
④	COVER	ANTENNA BLACK COVER	1PC
③	CONNECTOR	SMA S/T PLUG CONN OR EQUIVALENT	1PC
②	FROTH COTTON	EVA TAPE	1PC
①	PCB	FR-4	1PC

BILL OF MATERIAL

THIRD ANGLE PROJECTION

TOLERANCES UNLESS OTHERWISE SPECIFIED

ONE PLACE DECIMAL .X	±0.10
TWO PLACE DECIMAL .XX	±0.05
THREE PLACE DECIMAL .XXX	N/A
HOLE DIA. VARIATION .XX	N/A
ANGULAR DIMENSION (ENG)	N/A

DRAWING APPROVAL
DWN: Andy
CHKD: Billy
APPD: Alan
SIZE: A4
UNIT: mm
SCALE: — : —

BONE Electronics Co., Ltd.

CUS: Sany
BON P/N: BN-SY-ANG0002
CUS P/N: N/A
ITEM: 2G/3G/4G LTE ANTENNA 2M RG174 CABLE
SHEET: 1 OF 1
CUS REV: N/A
BN REV: A