China

FCC - TEST REPORT

Report Number	:	**60.792.19.006.01E01**	Date of Issue	:	October 15, 2019
Model	:	**HG05686A-US-RX, HG05686B-US-RX**			
Product Type	:	**Temperature station LCD USA, 2 assorted**			
Applicant	:	Lidl US, LLC			
Address	:	3500 South Clark Street, Arlington, VA 22202, USA			
Production Facility	:	AOK Electronic Limited			
Address	:	Tianxin Ind. District, Dahou, Xiegang, Dongguan, Guangdong, China			
Test Result	:	■**Positive** ☐**Negative**			
Total pages including Appendices	:	16			

TÜV SÜD Certification and Testing (China) Co., Ltd. Shenzhen Branch is a subcontractor to TÜV SÜD Product Service GmbH according to the principles outlined in ISO 17025.

TÜV SÜD Certification and Testing (China) Co., Ltd. Shenzhen Branch reports apply only to the specific samples tested under stated test conditions. Construction of the actual test samples has been documented. It is the manufacturer's responsibility to assure that additional production units of this model are manufactured with identical electrical and mechanical components. The manufacturer/importer is responsible to the Competent Authorities in Europe for any modifications made to the production units which result in non-compliance to the relevant regulations. TÜV SÜD Certification and Testing (China) Co., Ltd. Shenzhen Branch shall have no liability for any deductions, inferences or generalizations drawn by the client or others from TÜV SÜD Certification and Testing (China) Co., Ltd. Shenzhen Branch issued reports.

This report is the confidential property of the client. As a mutual protection to our clients, the public and ourselves, extracts from the test report shall not be reproduced except in full without our written approval

1 Table of Contents

1 Table of Contents 2
2 Description of the Equipment Under Test 3
3 Summary of Test Standards 4
4 Details about the Test Laboratory 5
4.1 Test Equipment Site List 6
4.2 Measurement System Uncertainty 7
5 Summary of Test Results 8
6 General Remarks 9
7 Test Setups 10
7.1 Radiated test setups 9kHz-30MHz 10
7.2 Radiated test setups Below 1GHz 10
7.3 Radiated test setups Above 1GHz 10
7.4 AC Power Line Conducted Emission test setups 11
8 Emission Test Results 12
8.1 Radiated Emission 12
9 Appendix A - General Product Information 16

2 Description of the Equipment Under Test

Description of the Equipment Under Test

Product:	Temperature station LCD USA, 2 assorted
Model no.:	HG05686A-US-RX, HG05686B-US-RX
FCC ID:	2AJ9O-HG5686RX
Rating	3 VDC (2 x 1. 5 V AAA battery)
Remark:	433.92MHz (Rx)

Auxiliary Equipment Used during Test:

DESCRIPTION	MANUFACTURER	MODEL NO.(SHIELD)	S/N(LENGTH)
--	--	--	--

3 Summary of Test Standards

Test Standards
FCC Part 15 Subpart B 10-1-18 Edition Federal Communications Commission, PART 15 — Radio Frequency Devices, Subpart B — Unintentional Radiators

All the tests were performed using the procedures from ANSI C63.4(2014).

4 Details about the Test Laboratory

Site 1

Company name: TÜV SÜD Certification and Testing (China) Co., Ltd. Shenzhen Branch
Building 12&13 Zhiheng Wisdomland Business Park,
Nantou Checkpoint Road 2,
Shenzhen 518052, P.R.China
FCC Registration Number: 514049

Emission Tests	
Test Item	Test Site
FCC Part 15 Subpart B	
FCC Title 47 Part 15.109 Radiated Emission	Site1
FCC Title 47 Part 15.107 Conduct Emission	NIL

4.1 Test Equipment Site List

Radiated emission Test – Site 1

DESCRIPTION	MANUFACTURER	MODEL NO.	SERIAL NO.	CAL. DUE DATE
EMI Test Receiver	Rohde & Schwarz	ESR 26	101269	2020-6-28
Signal Analyzer	Rohde & Schwarz	FSV40	101031	2020-6-28
Loop Antenna	Rohde & Schwarz	HFH2-Z2	100398	2020-7-7
Trilog Super Broadband Test Antenna	Schwarzbeck	VULB 9163	707	2020-7-5
Horn Antenna	Rohde & Schwarz	HF907	102294	2020-6-22
Wideband Horn Antenna	Q-PAR	QWH-SL-18-40-K-SG	12827	2020-7-5
Pre-amplifier	Rohde & Schwarz	SCU 18	102230	2020-6-28
Pre-amplifier	Rohde & Schwarz	SCU 40A	100432	2020-6-28
Attenuator	Agilent	8491A	MY39264334	2020-6-28
3m Semi-anechoic chamber	TDK	9X6X6	----	2020-7-7
Test software	Rohde & Schwarz	EMC32	Version 9.15.00	N/A

Conducted Emission Test – Site 1

DESCRIPTION	MANUFACTURER	MODEL NO.	SERIAL NO.	CAL. DUE DATE
EMI Test Receiver	Rohde & Schwarz	ESR 3	101782	2020-6-28
LISN	Rohde & Schwarz	ENV4200	100249	2020-6-28
LISN	Rohde & Schwarz	ENV432	101318	2020-7-19
LISN	Rohde & Schwarz	ENV216	100326	2020-6-28
ISN	Rohde & Schwarz	ENY81	100177	2020-6-28
ISN	Rohde & Schwarz	ENY81-CA6	101664	2020-6-28
High Voltage Probe	Rohde & Schwarz	TK9420(VT9420)	9420-584	2020-6-24
RF Current Probe	Rohde & Schwarz	EZ-17	100816	2020-7-2
Attenuator	Shanghai Huaxiang	TS2-26-3	080928189	2020-6-28
Test software	Rohde & Schwarz	EMC32	Version9.15.00	N/A

4.2 Measurement System Uncertainty

Measurement System Uncertainty Emissions

System Measurement Uncertainty	
Items	**Extended Uncertainty**
Uncertainty for Radiated Emission in 3m chamber 9kHz-30MHz	4.46dB
Uncertainty for Radiated Emission in 3m chamber 30MHz-1000MHz	Horizontal: 4.91dB; Vertical: 4.89dB;
Uncertainty for Radiated Emission in 3m chamber 1000MHz-25000MHz	Horizontal: 4.80dB; Vertical: 4.79dB;
Uncertainty for Conducted RF test	2.13dB

5 Summary of Test Results

Emission Tests				
FCC Part 15 Subpart B				
Test Condition	Pages	Test Result		
		Pass	Fail	N/A
FCC Title 47 Part 15.109 Radiated Emission 30MHz-1000MHz	12-15	☒	☐	☐
FCC Title 47 Part 15.107 Conduct Emission 150kHz-30MHz (1)	NIL	☐	☐	☒

Remark:
1) Conducted Emission testing is not applicable for battery operating device.

6 General Remarks

Remarks

Client informs that the **HG05686B-US-RX** have the same technical construction including circuit diagram, PCB Layout, components and component layout, all electrical construction and mechanical construction with **Temperature station LCD USA, 2 assorted, HG05686A-US-RX**. The difference lies only in the outlook/color of the different models. (Client's conformation letter shown at appendix A).

EMC Tests were performed on model: **HG05686A-US-RX**.

This submittal(s) (test report) is intended for **FCC ID: 2AJ9O-HG5686RX**, complies with Section 15.107, 15.109 of the FCC Part 15, Subpart B rules.

SUMMARY:

- All tests according to the regulations cited on page 6 were

■ - Performed

☐ - **Not** Performed

- The Equipment Under Test

■ - **Fulfills** the general approval requirements.

☐ - **Does not** fulfill the general approval requirements.

Sample Received Date: September 4, 2019

Testing Start Date: September 7, 2019

Testing End Date: September 14, 2019

Reviewed by:

Hosea CHAN
EMC Project Engineer

Prepared by:

Eric LI
EMC Senior Project Engineer

7 Test Setups

7.1 Radiated test setups 9kHz-30MHz

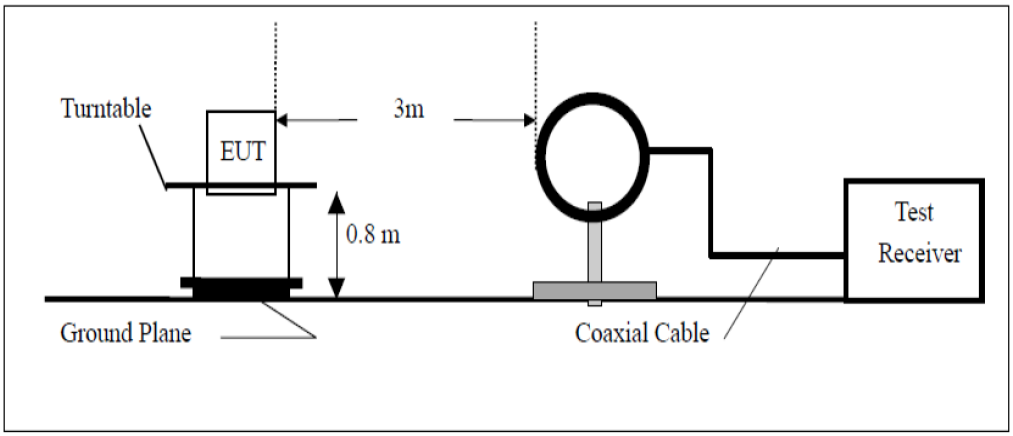

7.2 Radiated test setups Below 1GHz

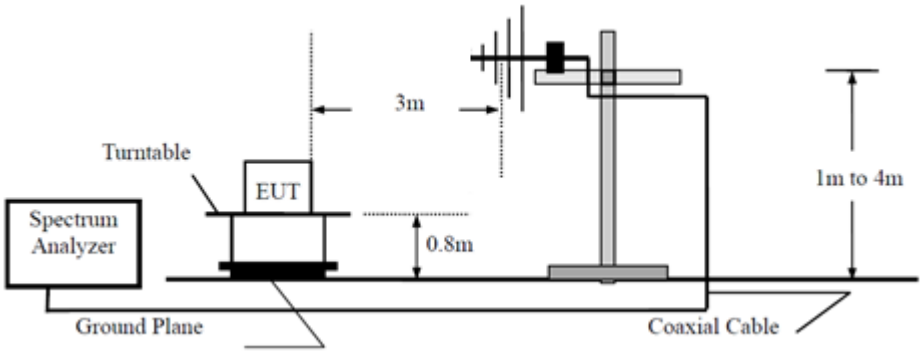

7.3 Radiated test setups Above 1GHz

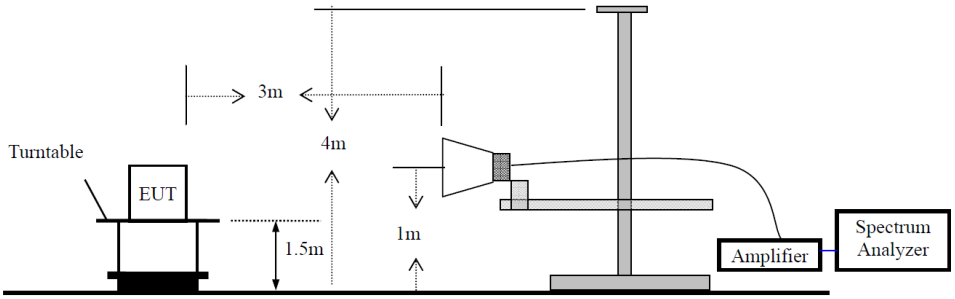

7.4 AC Power Line Conducted Emission test setups

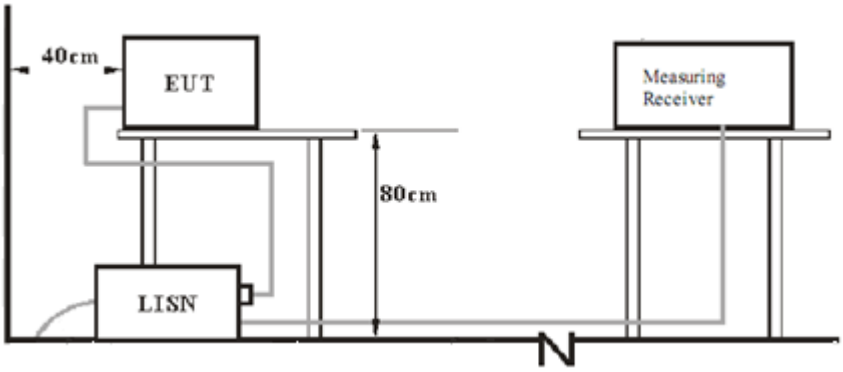

8 Emission Test Results

8.1 Radiated Emission

EUT:	HG05686A-US-RX
Op Condition:	433MHz Rx mode
Test Specification:	FCC 15.109
Comment:	3V DC, 30MHz-1GHz, Antenna: Horizontal

Test Result
☒ Passed
☐ Not Passed

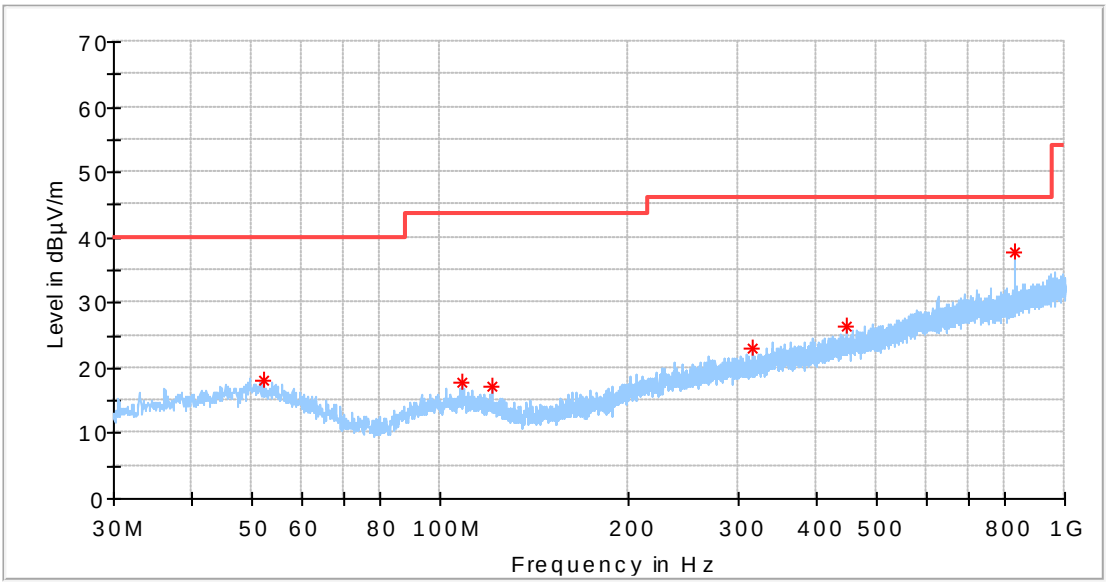

Frequency (MHz)	MaxPeak (dBµV/m)	Limit (dBµV/m)	Margin (dB)	Corr. (dB)
52.006875	18.26	40.00	-21.74	17.8
108.206250	17.66	43.50	-25.84	15.6
120.937500	17.32	43.50	-26.18	14.9
316.635000	23.06	46.00	-22.94	20.4
447.948750	26.38	46.00	-19.62	23.1
830.310625	37.75	46.00	-8.25	28.8

Radiated Emission

EUT:	HG05686A-US-RX
Op Condition:	433MHz Rx mode
Test Specification:	FCC 15.109
Comment:	3V DC, 30MHz-1GHz, Antenna: Vertical

Test Result
☒ Passed
☐ Not Passed

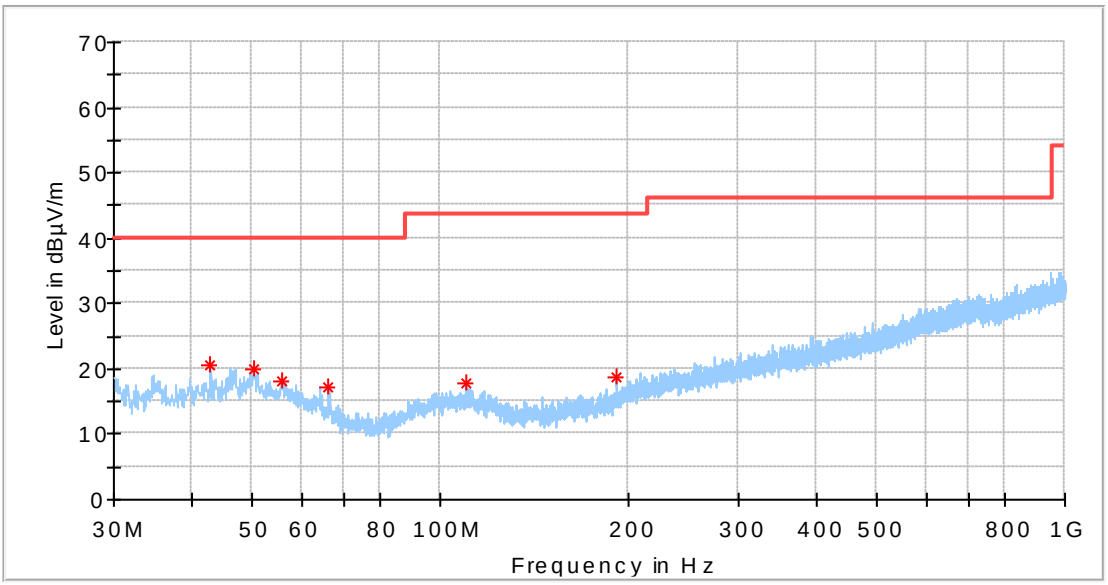

Frequency (MHz)	MaxPeak (dBµV/m)	Limit (dBµV/m)	Margin (dB)	Corr. (dB)
42.913125	20.55	40.00	-19.45	16.8
50.248750	20.00	40.00	-20.00	18.2
55.583750	18.24	40.00	-21.76	17.0
66.314375	17.08	40.00	-22.92	13.6
110.267500	17.72	43.50	-25.78	15.5
191.990000	18.80	43.50	-24.70	15.4

Radiated Emission

EUT: HG05686A-US-RX
Op Condition: 433MHz Rx mode
Test Specification: FCC 15.109
Comment: 3V DC, 1-6GHz, Antenna: Horizontal

Test Result
☒ Passed
☐ Not Passed

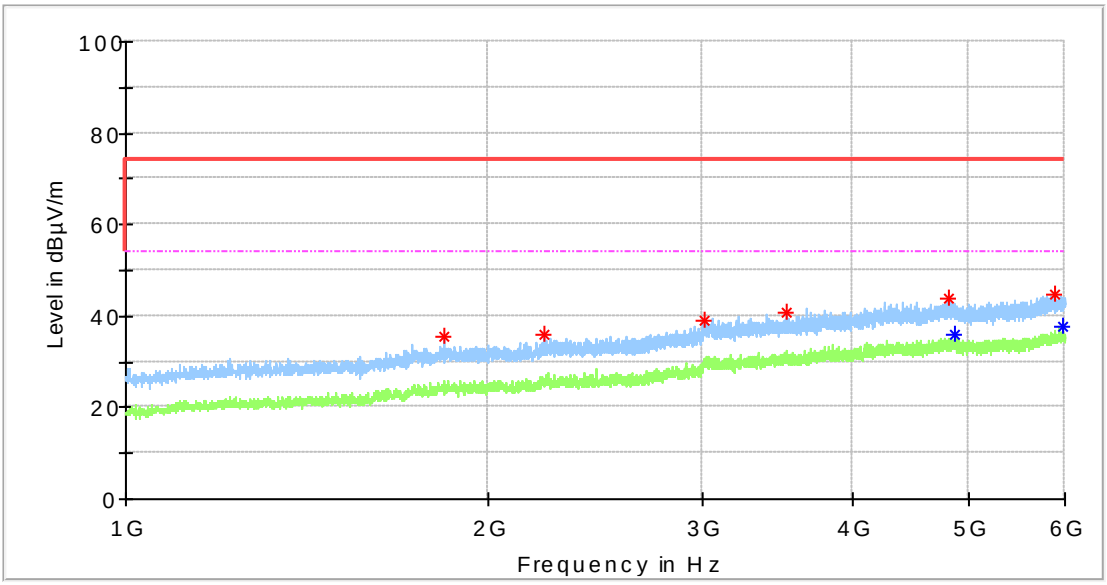

Frequency (MHz)	MaxPeak (dBµV/m)	Average (dBµV/m)	Limit (dBµV/m)	Margin (dB)	Corr. (dB)
1838.000000	35.58	---	74.00	-38.42	-9.6
2223.000000	35.79	---	74.00	-38.21	-8.5
3014.000000	39.03	---	74.00	-34.97	-4.1
3532.500000	40.87	---	74.00	-33.13	-2.6
4809.000000	43.73	---	74.00	-30.27	0.3
4861.500000	---	35.77	54.00	-18.23	0.5
5883.500000	44.63	---	74.00	-29.37	1.9
5986.500000	---	37.93	54.00	-16.07	2.1

Radiated Emission

EUT: HG05686A-US-RX
Op Condition: 433MHz Rx mode
Test Specification: FCC 15.109
Comment: 3V DC, 1-6GHz, Antenna: Vertical

Test Result
☒ Passed
☐ Not Passed

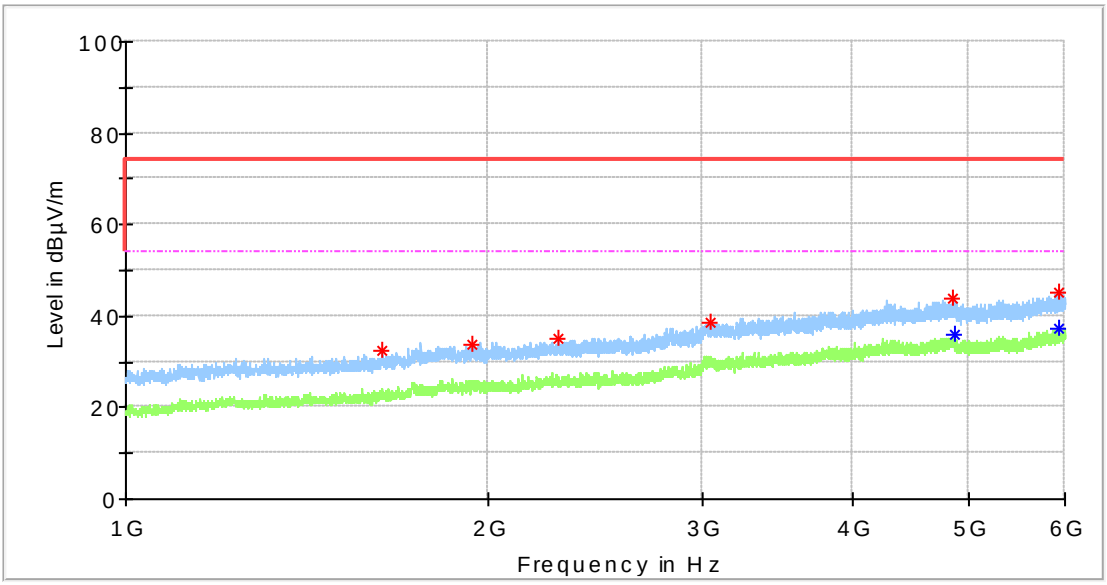

Frequency (MHz)	MaxPeak (dBµV/m)	Average (dBµV/m)	Limit (dBµV/m)	Margin (dB)	Corr. (dB)
1633.000000	32.34	---	74.00	-41.66	-11.5
1934.000000	33.67	---	74.00	-40.33	-9.3
2283.000000	35.24	---	74.00	-38.76	-8.2
3048.000000	38.59	---	74.00	-35.41	-3.8
4843.500000	43.90	---	74.00	-30.10	0.5
4864.500000	---	35.92	54.00	-18.08	0.6
5934.000000	45.15	---	74.00	-28.85	2.0
5939.500000	---	37.30	54.00	-16.70	2.0

9 Appendix A - General Product Information

Declaration letter of model difference

Lidl US LLC.

To: TÜV SÜD Hong Kong Limited

Attention: Edmond Fung
From:
Fax No:
Project No.:

Date: October 11, 2019
Total Page (Cover Included): 1

Subject: **Declaration letter**

We: **Company Name:** Lidl US LLC.
Address: 3500 S. Clark Street, Arlington, Virginia, United States

Officially notify TÜV SÜV Hong Kong Limited that the <<Model A>> have the same technical construction including circuit diagram, PCB Layout, components and component layout, all electrical construction and mechanical construction, with <<PRODUCT>>, <<Model B>>. The difference lies only in the outlook/color of the different models.

<<Model A>>: HG05686A-US-TX, HG05686A-US-RX

<<Model B>>: HG05686B-US-TX, HG05686B-US-RX

<<Product>>: Temperature station LCD USA, 2 assorted

Applicant: Lidl US LLC.

10/11/2019
(Date)

(Applicant's authorized signature and company Chop)

10/11/2019
(Date)

(Applicant's authorized signature and company Chop)

Page 1 of 1