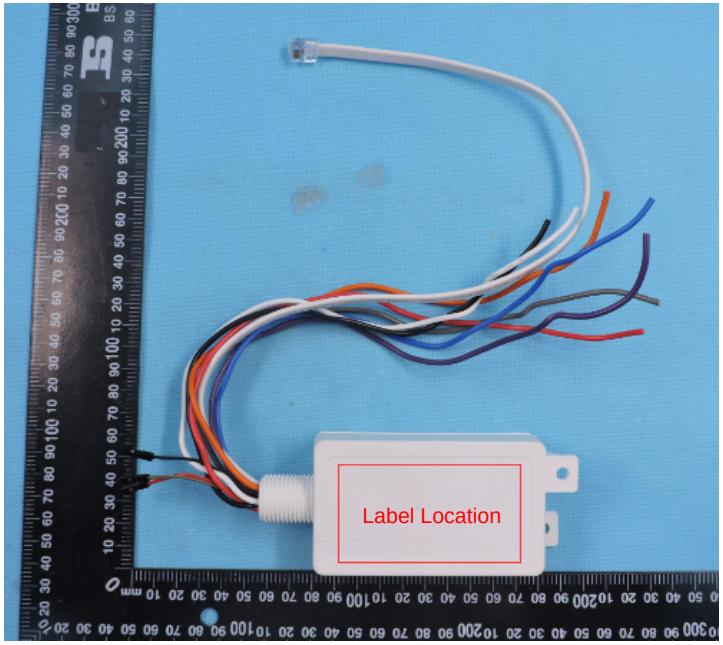
Label Location

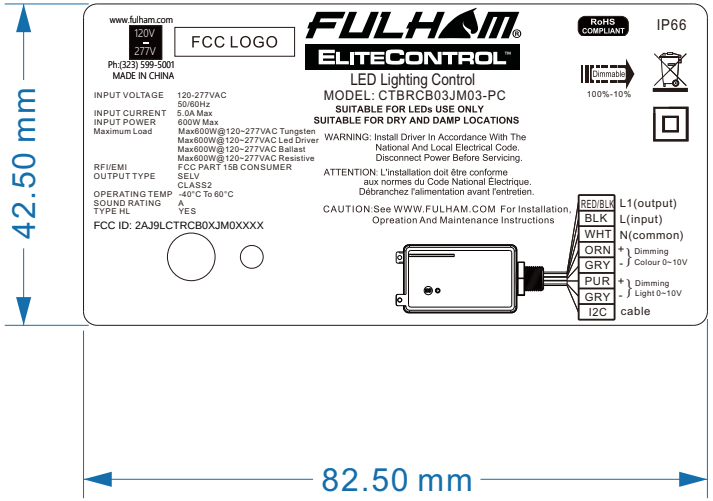
www.fulham.com
120V
277V
Ph:(323) 599-5001
MADE IN CHINA
FCC LOGO
FULHAM
ELITECONTROL
LED Lighting Control
MODEL: CTBRCB03JM03-PC
SUITABLE FOR LEDs USE ONLY
SUITABLE FOR DRY AND DAMP LOCATIONS
RoHS COMPLIANT
IP66
Dimmable
100%-10%
INPUT VOLTAGE 120-277VAC 50/60Hz
INPUT CURRENT 5.0A Max
INPUT POWER 600W Max
Maximum Load Max600W@120~277VAC Tungsten
Max600W@120~277VAC Led Driver
Max600W@120~277VAC Ballast
Max600W@120~277VAC Resistive
RFI/EMI FCC PART 15B CONSUMER
OUTPUT TYPE SELV CLASS2
OPERATING TEMP -40°C To 60°C
SOUND RATING A
TYPE HL YES
FCC ID: 2AJ9LCTRCB0XJM0XXXX
WARNING: Install Driver In Accordance With The National And Local Electrical Code. Disconnect Power Before Servicing.
ATTENTION: L'installation doit être conforme aux normes du Code National Electrique. Débranchez l'alimentation avant l'entretien.
CAUTION:See WWW.FULHAM.COM For Installation, Opreation And Maintenance Instructions
RED/BLK L1(output)
BLK L(input)
WHT N(common)
ORN + GRY - Dimming Colour 0~10V
PUR + GRY - Dimming Light 0~10V
I2C cable
42.50 mm
82.50 mm