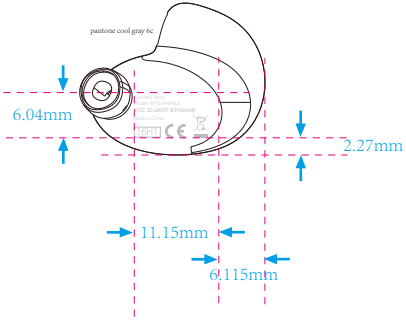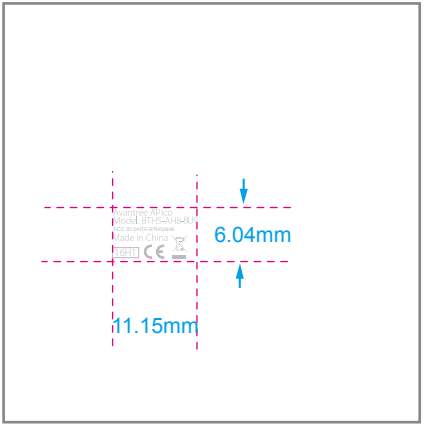Avantronics	Product Silkscreen	Z-PNT1-AH8-B-V1	Logo:	Avantree	Date:	2016.07.19
			Version:	V1	Comfirm Date: