B+B SMARTWORX

Powered by ADVANTECH

LTE Industrial Router

SmartStart SL301

USER'S MANUAL

International Headquarters

Advantech B+B SmartWorx
707 Dayton Road
Ottawa, IL 61350 USA

Phone +1 (815) 433-5100 – **General Fax** +1 (815) 433-5105

Websites
www.bb-smartworx.com
www.bb-smartsensing.com
support@bb-elec.com

Cellular Routers Office

Advantech B+B SmartWorx s.r.o.
Sokolska 71
562 04, Usti nad Orlici III,
Czech Republic

Phone +420 465 521 020

Websites
www.bb-smartcellular.eu
cellularsupport@advantech-bb.com

© 2016 Advantech B+B SmartWorx s.r.o. No part of this publication may be reproduced or transmitted in any form or by any means, electronic or mechanical, including photography, recording, or any information storage and retrieval system without written consent. Information in this manual is subject to change without notice, and does not represent a commitment on the part of Advantech B+B SmartWorx.

Advantech B+B SmartWorx s.r.o. shall not be liable for incidental or consequential damages resulting from the furnishing, performance, or use of this manual.

All brand names used in this manual are the registered trademarks of their respective owners. The use of trademarks or other designations in this publication is for reference purposes only and does not constitute an endorsement by the trademark holder.

This device complies with part 15 of the FCC Rules. Operation is subject to the following two conditions: (1) This device may not cause harmful interference, and (2) this device must accept any interference received, including interference that may cause undesired operation.

Warning: Changes or modifications to this unit not expressly approved by the party responsible for compliance could void the user's authority to operate the equipment.

This device complies with Industry Canada license-exempt RSS standard(s). Operation is subject to the following 2 conditions: (1) this device may not cause interference, and (2) this device must accept any interference, including interference that may cause undesired operation of the device.

Used symbols

Danger – Information regarding user safety or potential damage to the router.

Attention – Problems that can arise in specific situations.

Information, notice – Useful tips or information of special interest.

GPL licence

Source codes under GPL licence are available free of charge by sending an email to:

cellularsales@advantech-bb.com.

Advantech B+B SmartWorx s.r.o., Sokolska 71, 562 04 Usti nad Orlici, Czech Republic
Manual Rev. 1 released in CZ, July 20, 2016

Contents

1 Safety Instruction **2**

2 WEEE directive **3**

3 Router Description **4**

3.1 LTE Category 1 (Cat.1) 4
3.2 Basic HW Information 4
3.3 Configuration and Diagnostics 4
3.4 Usage of the Router 5

4 Contents of Package **8**

4.1 Recommended Accessories 8

5 Router Design **9**

5.1 Router Versions 9
5.2 Delivery Identification 10
5.3 Order Codes 10
5.4 Basic Dimensions of the Router Box 11
5.5 Mounting Recommendations 12
5.6 Removing from the DIN Rail 13
5.7 Description of the Rear Panel 14
5.8 Description of the Front Panel 14
5.8.1 Status indication 15
5.8.2 Power PWR / IO Connector 16
5.8.3 Antenna Connector ANT, DIV and WiFi 18
5.8.4 SIM Card Reader 19
5.8.5 Ethernet Port ETH 20
5.8.6 Serial Port RS232 21
5.8.7 Reset 22

6 First Use **23**

6.1 Connecting the Router Before the First Use 23
6.2 Start 24
6.3 Configuration 24
6.3.1 Configuration over web browser 24

7 Technical Parameters **26**

7.1 Basic Parameters 26

7.2 Technical specification of user interfaces 26
7.3 Standards and Regulations 27
7.4 Type Tests and Environmental Conditions 27
7.5 Technical Parameters of Module 28
7.6 Technical Parameters of WiFi 28
7.7 Other Technical Parameters 29

8 Recommended Literature 30

9 Troubleshooting 31

9.1 FAQ 31

10 Customers Support 33

10.1 Global Customer Support 33
10.2 Customer Support for NAM 34

List of Figures

1 Access to the Internet from LAN 5
2 Backed up access to the Internet 6
3 Using VPN tunnel 6
4 Serial Gateway 7
5 Contents of package 8
6 Front panel 9
7 Label for versions without WiFi 10
8 Label for versions with WiFi 10
9 Basic dimensions of the router box 11
10 Default position of DIN holder 13
11 Removing from the DIN rail 13
12 SmartStart front panel 14
13 PWR / IO connector 16
14 Connection of power supply 16
15 Connecting of the antenna 18
16 SIM cards 19
17 Ethernet connector 20
18 Connection of Ethernet cable 20
19 RS232 connector 21
20 Router reset 22
21 Router connection 23
22 Entering the IP address of the router 24
23 Entering login information 24
24 Router web interface 25

List of Tables

1 Router versions 9
2 Delivery identification 10
3 Order codes overview 10
4 Front panel description 14
5 Status indication 15
6 Connection of PWR / IO connector 16
7 Characteristics of binary input 17
8 Connection of Ethernet connector 20
9 Connection of RS232 connector 21
10 Description of reset and restart router 22
11 Basic parameters 26
12 Technical specification of user interfaces 26
13 Standards and regulations 27
14 Type tests and environmental conditions 27
15 Technical parameters of module for NAM – Verizon 28
16 Technical parameters of WiFi 28
17 Other technical parameters 29

1. Safety Instruction

Please, observe the following instructions:

- The router must be used in compliance with all applicable international and national laws and in compliance with any special restrictions regulating the utilization of the router in prescribed applications and environments.
- To prevent possible injury and damage to appliances and to ensure compliance with all relevant provisions, use only the original accessories. Unauthorized modifications or the use of unapproved accessories may result in damage to the router and a breach of applicable regulations. Unauthorized modifications or use of unapproved accessories may void the warranty.
- The router can not be opened.
- Turn off the router and disconnect it from power supply before handling of the SIM card.
- **Caution!** The SIM card could be swallowed by small children.
- Input voltage must not exceed 36 V DC max.
- Do not expose the router to extreme ambient conditions. Protect the router against dust, moisture and high temperature.
- The router should not be used in locations where flammable and explosive materials are present, including gas stations, chemical plants, or locations in which explosives are used. We remind the users of the duty to observe the restrictions concerning the utilization of radio devices at such places.
- Switch off the router when traveling by plane. Utilization of the router in a plane may endanger the operation of the plane or interfere with the mobile telephone network, and may be unlawful. Failure to observe these instructions may result in the suspension or cancellation of telephone services for the respective client, or, it may result in legal sanctions; it may also result in both eventualities.
- When using the router in the close proximity of personal medical devices, such as cardiac pacemakers or hearing aids, you must proceed with heightened caution.
- The router may cause interference when in the close proximity of TV sets, radio receivers or personal computers.
- It is recommended that you should create an appropriate copy or backup of all the important settings that are stored in the memory of the device.

2. Product Disposal Instructions

The WEEE (Waste Electrical and Electronic Equipment: 2002/96/EC) directive has been introduced to ensure that electrical/electronic products are recycled using the best available recovery techniques to minimize the impact on the environment. This product contains high quality materials and components which can be recycled. At the end of it's life this product MUST NOT be mixed with other commercial waste for disposal. Check the terms and conditions of your supplier for disposal information.

3. Router Description

Cellular router SmartStart SL301 is designed for wireless communication in the mobile networks that make use of traditional cellular technologies. The primary purpose of this router is its use in the newest Category 1 (Cat.1) services on the cellular LTE network of the Verizon carrier.

3.1 LTE Category 1 (Cat.1)

Given the uncertain future of 2G technologies (they are gradually sunsetting), it needs to find a suitable (natural) replacement. LTE Category 1 (Cat.1) in general is the only real alternative to 2G. It is specifically designed to bring 4G LTE capabilities to the Internet of Things (IoT) and machine-to-machine (M2M) applications. Like all LTE services, Cat.1 provides a low-latency broadband connection but capped at 10 Mbps download (and 5 Mbps upload). It is an ideal solution for smart meters for utilities, telematics for vehicle tracking and fleet management and security use cases, such as in alarm systems.

3.2 Basic HW Information

As a standard, the SmartStart router is equipped with one Ethernet 10/100, one serial interface RS232, one binary input and one output. SL301 also contains one reader for 3 V and 1.8 V SIM cards, which is placed on the rear panel of the device. The router can be equipped with a WiFi module, but this must be part of the initial configuration – it cannot be added to the router at some point in the future. The router is supplied in a plastic casing.

3.3 Configuration and Diagnostics

For configuration of the cellular router is available web interface protected by password. Web interface provides (after logging in) detailed statistics about the router activities, signal strength, detailed system log etc. This device supports the creation of VPN tunnels using technologies IPSec, OpenVPN and L2TP for secure communications. There are also supported functions such as IPv6 (the latest revision of the Internet Protocol), DHCP, NAT, NAT-T, DynDNS, NTP, VRRP, control by SMS, backup primary connection and many other functions.

Other diagnostic functions ensuring continuous communication include automatic inspection of PPP connection offering an automatic restart feature in case of connection is lost, or hardware watchdog which monitors the status of the router. Using a special window (start up script window) you may insert Linux scripts for various actions. For some applications is the key possibility to create several different configurations for one router which can be switched as needed (e.g. using SMS or status of the binary input). Cellular routers may automatically update configuration and firmware from server. This allows mass reconfiguration of many routers in one time.

The router also supports additional software like R-SeeNet for permanent traffic monitoring of routers.

Examples of possible applications

- mobile office
- smart meters for utilities
- fleet management
- security system
- telematic
- telemetric
- remote monitoring
- vending and dispatcher machines

3.4 Usage of the Router

The router is primarily intended for these four basic situations:

I. Access to the Internet from LAN

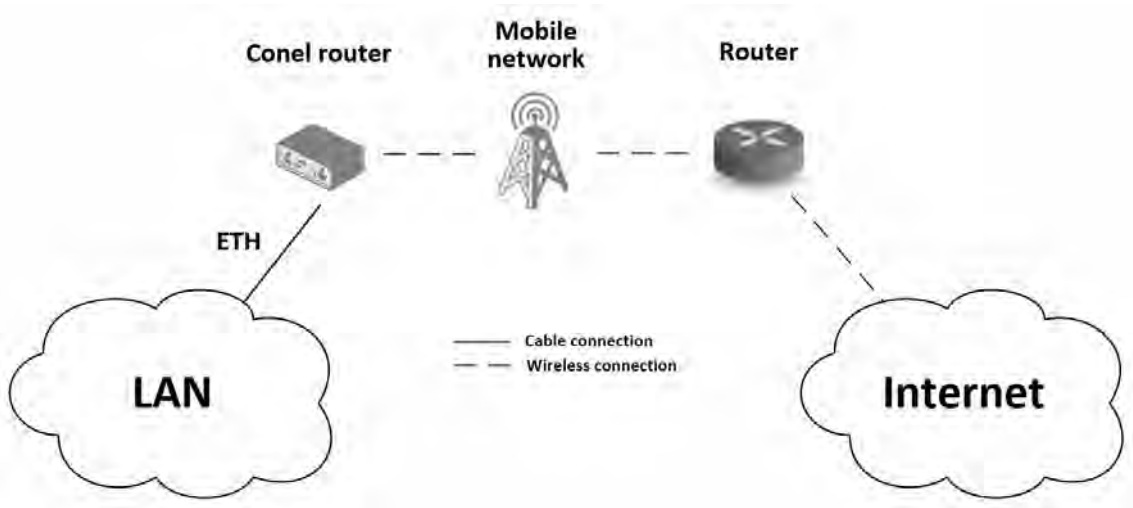

Figure 1: Access to the Internet from LAN

II. Backed up access to the Internet (from LAN)

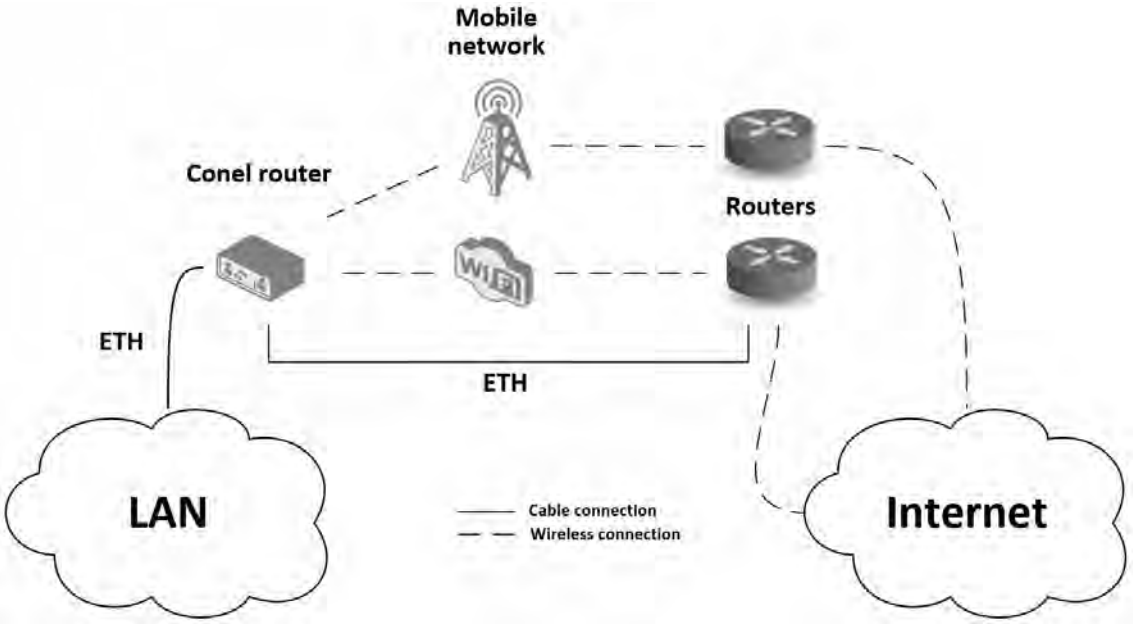

Figure 2: Backed up access to the Internet

III. Secure networks interconnection or using VPN

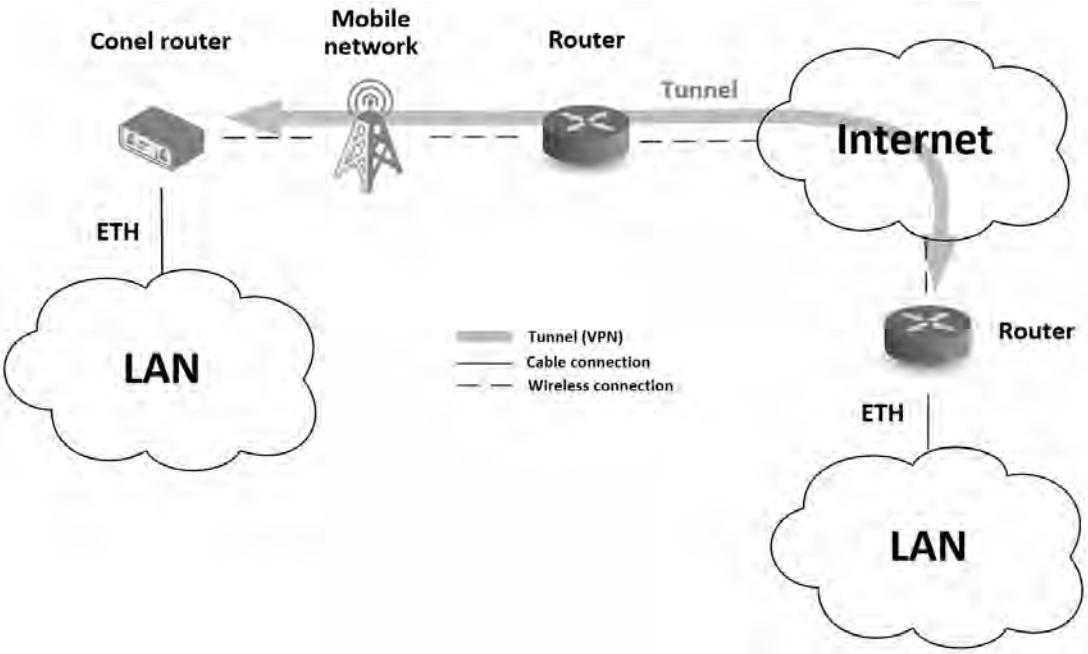

Figure 3: Using VPN tunnel

IV. Serial Gateway

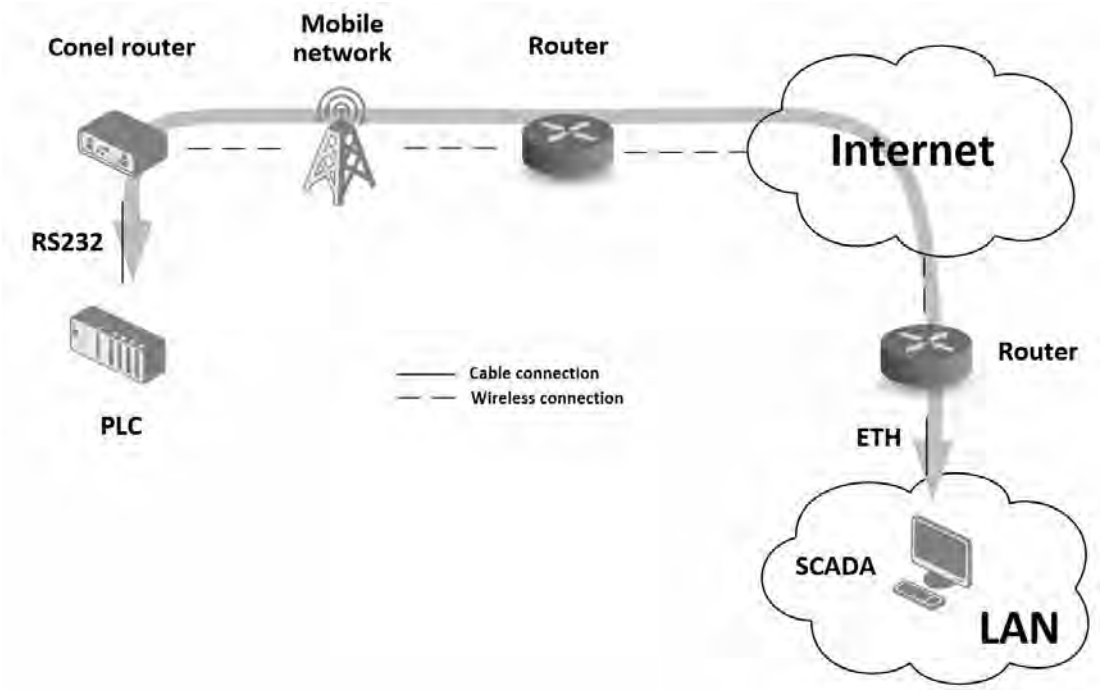

Figure 4: Serial Gateway

4. Contents of Package

The basic router set available for delivery includes the following items:

- router,
- power supply and IO cable (1.5 m long),
- clip for the DIN rail (two screws are included),
- paper start guide.

Figure 5: Contents of package

4.1 Recommended Accessories

The following list contains the recommended accessories. **These accessories are not included in the package!**

- LTE antennas:
  - Terminal antenna Taoglas TG.30.8113
  - Magnetic mount antenna Taoglas GA.110.101111
- WiFi Antenna Sectron AW-A24G-SRPK2
- Power Supply 12 V / 12 W
  - Multi country (EU, UK, AUS, US)
  - Level Efficiency VI

5. Router Design

5.1 Router Versions

The SmartStart router is supplied in the following versions (see table below). All versions are available only in the plastic box.

Router versions	SIM	BIN	BOUT	ETH	RS232	WiFi
SL301 with RS232	1 x	1 x	1 x	1 x	1 x	
SL301 with RS232 & WiFi	1 x	1 x	1 x	1 x	1 x	1 x

Table 1: Router versions

Figure 6: Front panel

5.2 Delivery Identification

Trade name	Product name	Other
SL301	SmartStart	LTE router (Cat.1) for NAM (Verizon)

Table 2: Delivery identification

Figure 7: Label for versions without WiFi

Figure 8: Label for versions with WiFi

5.3 Order Codes

Order codes overview is shown in the table below.

Name	Order code	Features – interfaces
SmartStart SL301	SL30100010	LTE module Cat.1 Verizon, 1x ETH, 1x RS232, 1x BI, 1x BO, 1x SIM reader
SmartStart SL301	SL30110110	LTE module Cat.1 Verizon, 1x ETH, 1x RS232, 1x BI, 1x BO, 1x SIM reader, WiFi
SmartStart SL301	SL30100015	LTE module Cat.1 Verizon, 1x ETH, 1x RS232, 1x BI, 1x BO, 1x SIM reader, accessories (four different plugs for power supply)
SmartStart SL301	SL30110115	LTE module Cat.1 Verizon, 1x ETH, 1x RS232, 1x BI, 1x BO, 1x SIM reader, WiFi, accessories (four different plugs for power supply)

Table 3: Order codes overview

5.4 Basic Dimensions of the Router Box

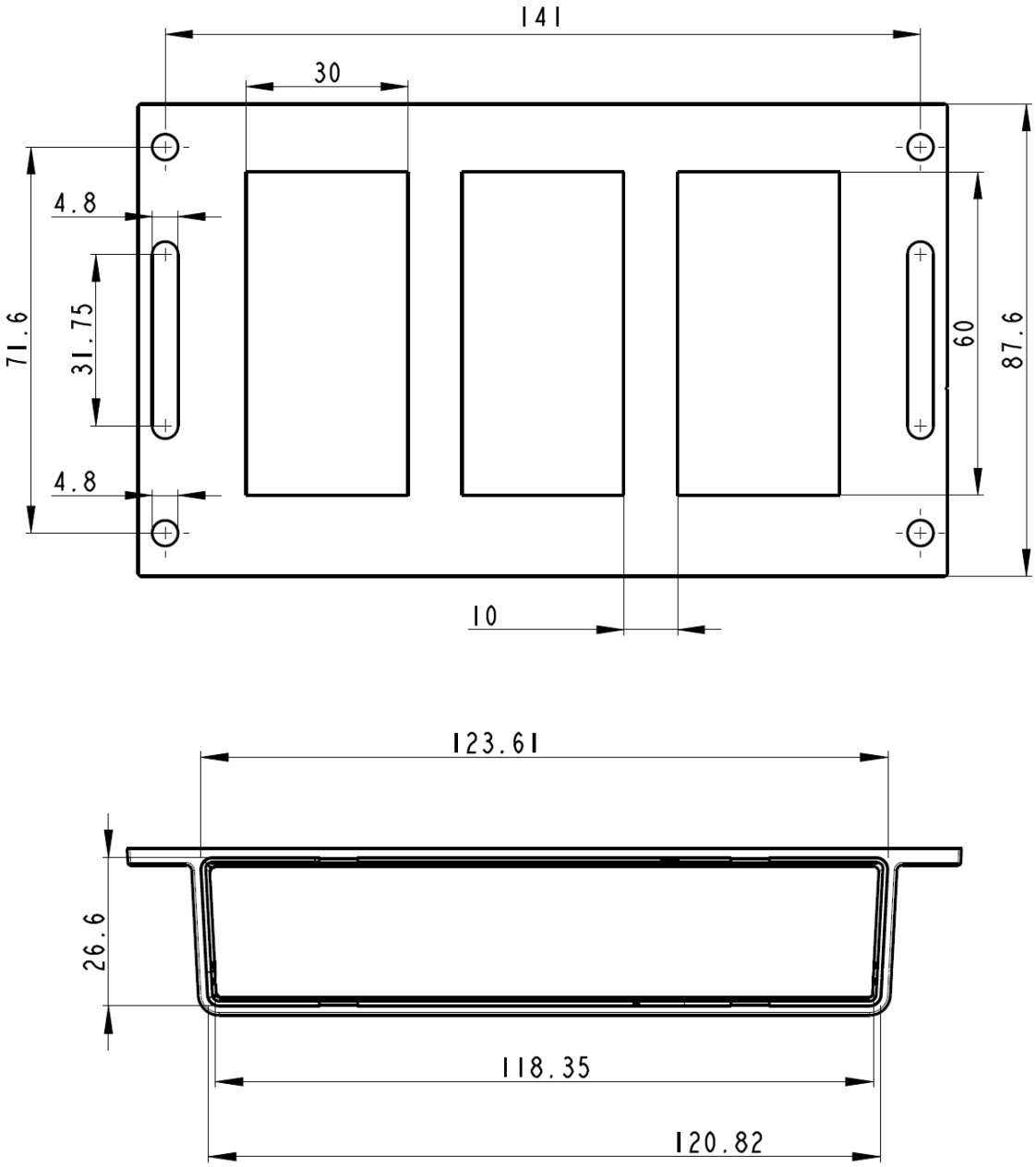

Figure 9: Basic dimensions of the router box

5.5 Mounting Recommendations

- possibility to be put on a work surface,
- DIN rail EN 60715 with included clip CKD-SBD23.

For the most of applications with a built-in router in a switch board it is possible to recognize two kinds of environments:

- no public and industry environment of low voltage with high interference,
- public environment of low voltage without high interference.

It is possible to mount the router to a switch board ror both of these environments. Then there is no need to perform any immunity or emission test in relation to EMC according to EN 61439-1:2011.

For complying with EN 61439-1:2011 standard is necessary to observe the following router installation into switchboard:

- For whip antennas we recommend to observe a distance of 6 cm from cables and metal surfaces on every side due to the elimination of interference. While using an external antenna except for the switch-board it is necessary to fit a lightening conductor.
- Before mounting a router on sheet-steel we recommend using a "cable" antenna.
- For every cables we recommend to bind the bunch, we recommend for this use:
  - Length of the bunch (combination of power supply and data cables) can be maximum 1.5 m. If the length of data cables exceeds 1.5 m or in the event of, the cable leads towards the switch – board. We recommend installing over – voltage protectors (surge suppressors).
  - With data cables they mustn't carry cables with reticular tension $\sim$ 230 V/50 Hz.
- Sufficient space must be left in front of individual connectors for handling of cables,
- For correct function of the router we recommend to use in the switch-board earth-bonding distribution frame for grounding of power supply of router, data cables and antenna.

5.6 Removing from the DIN Rail

DIN holder is suitable for DIN rail according to EN 60715 standard only. Default position of CKD-SBD23 holder, which is used for mounting the router on a DIN rail, is shown in the following figure:

Figure 10: Default position of DIN holder

For removing from the DIN rail it is necessary to lightly push upward the router so that the top part of the CKD-SBD23 holder hitched to the DIN rail get out of this rail and then fold out the top part of the router away from the DIN rail.

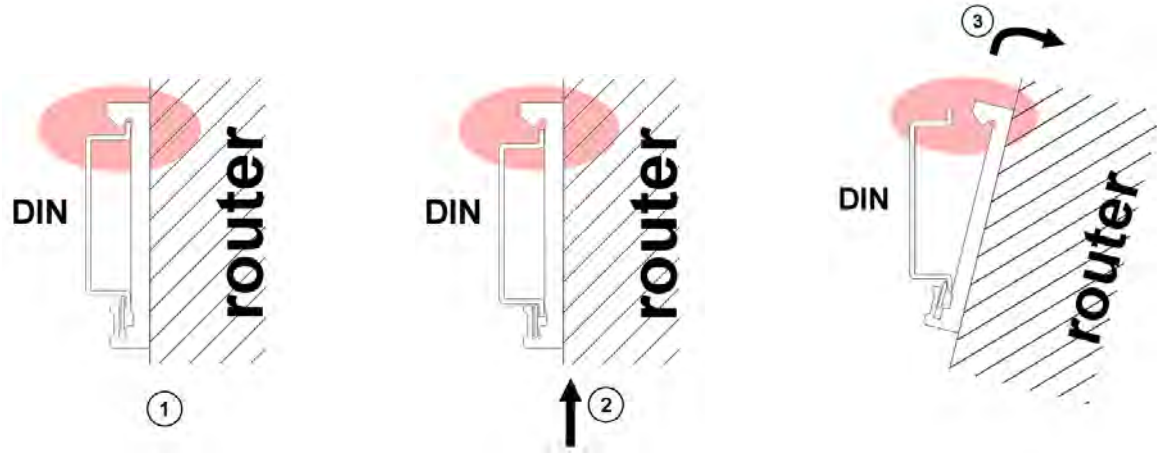

Figure 11: Removing from the DIN rail

5.7 Description of the Rear Panel

The rear panel contains one holder for SIM cards (*SIM1*) and *RST* button used to restore default configuration and reboot the router.

5.8 Description of the Front Panel

On the front panel is the following:

Caption	Connector	Description
PWR/IO	4-pin	Connector for the power supply and connection of the binary input and output.
ETH	RJ45	Connector for connection into the computer network.
RS232	DB9 female	Connector for serial interface RS232.
ANT	SMA	Connector for main antenna.
DIV	SMA	Connector for diversity antenna.
WiFi	R-SMA	Connector for WiFi antenna (**only for versions with WiFi module!**).

Table 4: Front panel description

Figure 12: SmartStart front panel

5.8.1 Status indication

About router status inform three LED indicators on the front panel. The ETH port has two additional LEDs that provide information about the port status.

Caption	Color	State	Description
PWR	Green	Blinking On Fast blinking	Router is ready Starting of the router Updating firmware
DAT	Red	Blinking	Communication in progress on the radio channel
WAN	Yellow	LED goes out 1x per one sec. LED goes out 1x per two sec. LED goes out 1x per five sec.	Signal strength is from –50 dBm to –69 dBm Signal strength is from –70 dBm to –89 dBm or difference between neighbours cells is exactly 3 dBm Signal strength is from –90 dBm to –113 dBm or difference between neighbours cells is smaller than 3 dBm
ETH	Green	On Off	Selected 100 Mbps Selected 10 Mbps
ETH	Yellow	On Blinking Off	The network cable is connected Data transmission The network cable is not connected

Table 5: Status indication

State indication of WAN LED is updated every 10 seconds.

5.8.2 Power PWR / IO Connector

Panel socket 4-pin.

Pin number	Signal mark	Description
1	GND(-)	Negative pole of DC supply voltage
2	VCC(+)	Positive pole of DC supply voltage (+9 to +36 V DC)
3	IN0	Binary input
4	OUT0	Binary output

Table 6: Connection of PWR / IO connector

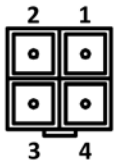

Figure 13: PWR / IO connector

Power supply for the router must be between +9 V to +36 V DC supply. Protection against reversed polarity without signaling is built into the router. The router can be put into low power mode using a special command `lpm`. Then it can be awakened by an activity on binary input or using an internal timer. For more details of this command, see the application note *Commands and Scripts* [3].

Upon power supply outage and subsequent renewal, the router is awakened!

Circuit example:

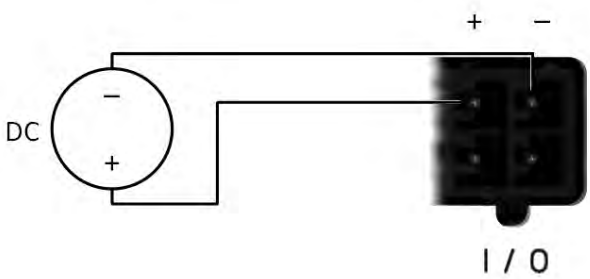

Figure 14: Connection of power supply

The PWR / IO interface is also designed for processing of binary input and control (setting) binary output.

Binary Input

logical 0 / 1*	Voltage	Web interface status
logic 0	0 – 0.7 V	On
logic 1	1.6 – 36 V	Off

Table 7: Characteristics of binary input

* The binary input status in the Shell returned via `io get bin0`.

Binary Output

Binary output is open in the default configuration. Current of binary output is limited by a resettable fuse (200 mA).

5.8.3 Antenna Connector ANT, DIV and WiFi

Main and diversity antennas are connected to the router using the SMA connector on the front panel. There is also available R-SMA antenna connector through which the additional antenna can be connected, if the router is equipped with WiFi module.

ANT connector is used to connect the main antenna router. To connect the diversity antenna is used the second antenna connector *DIV*. R-SMA connector named *WiFi* is designed for connection of WiFi antenna (available only for versions with WiFi module).

The router can not operate without connected main antenna marked as *ANT*!

For connection the antenna is used SMA connector. The antenna is connected by screwing this antenna to the SMA connector on the front panel of the router (see figure below).

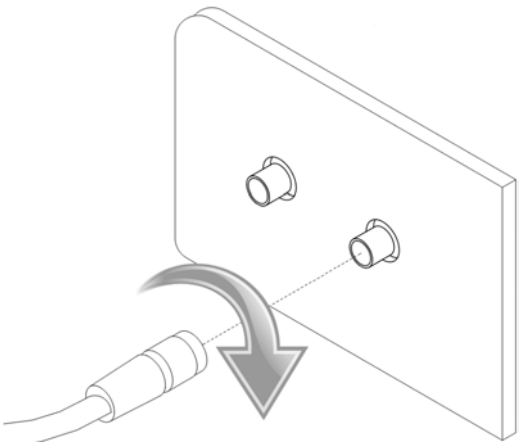

Figure 15: Connecting of the antenna

Diversity antenna improves radio features of the router at low signal strength.

5.8.4 SIM Card Reader

SmartStart SL301 contains one reader for 3 V and 1.8 V SIM cards, which is placed on the rear panel of the device. For getting the router to work is necessary to insert an activated SIM card with an unblocked PIN code. The SIM cards might be of different adjusted APN (Access Point Name).

Changing the SIM card:

- Before handling of the SIM card disconnect the router from power supply!
- Use a plastic opening tool, or your fingernail, to press the SIM card slightly deeper into its slot until you hear a click.
- After the click, release the card and it will pop out of its slot.
- Remove the SIM card and push any other SIM card into the slot until it clicks in place.

Figure 16: SIM cards

5.8.5 Ethernet Port ETH

The panel socket RJ45 is used for this interface. Ethernet isolation is 1500 V.

Pin	Signal mark	Description	Data flow direction
1	TXD+	Transmit Data – positive pole	Input/Output
2	TXD-	Transmit Data – negative pole	Input/Output
3	RXD+	Receive Data – positive pole	Input/Output
4	—	—	
5	—	—	
6	RXD-	Receive Data – negative pole	Input/Output
7	—	—	
8	—	—	

Table 8: Connection of Ethernet connector

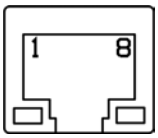

Figure 17: Ethernet connector

Ethernet cable plug into the RJ45 connector labeled as ETH (see figure below).

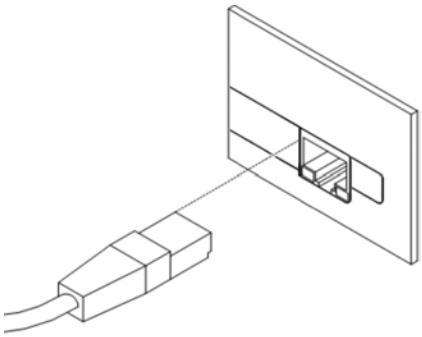

Figure 18: Connection of Ethernet cable

5.8.6 Serial Port RS232

The DB9 Female connector is used for this interface.

Pin	Signal mark	Description	Data flow direction
1	DCD	Data Carrier Detect	Output
2	RXD	Receive Data	Output
3	TXD	Transmit Data	Input
4	DTR	Data Terminal Ready	Input
5	GND	System Ground	—
6	DSR	Data Set Ready	Output
7	RTS	Request to Send	Input
8	CTS	Clear to Send	Output
9	RI	Ring Indicator	NC

Table 9: Connection of RS232 connector

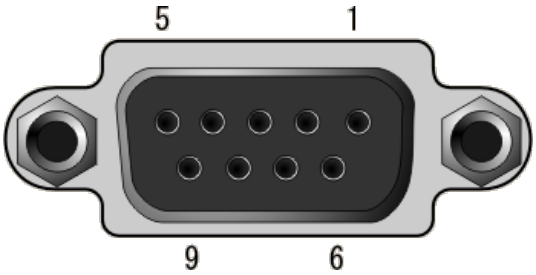

Figure 19: RS232 connector

5.8.7 Reset

When *PWR* LED starts flashing on the front panel, it is possible to restore the default configuration of the router by pressing the *RST* button on the rear panel. After pressing this button the default configuration is restored and then router reboots (green LED will be on).

For pressing the *RST* button could be used a narrow screwdriver.

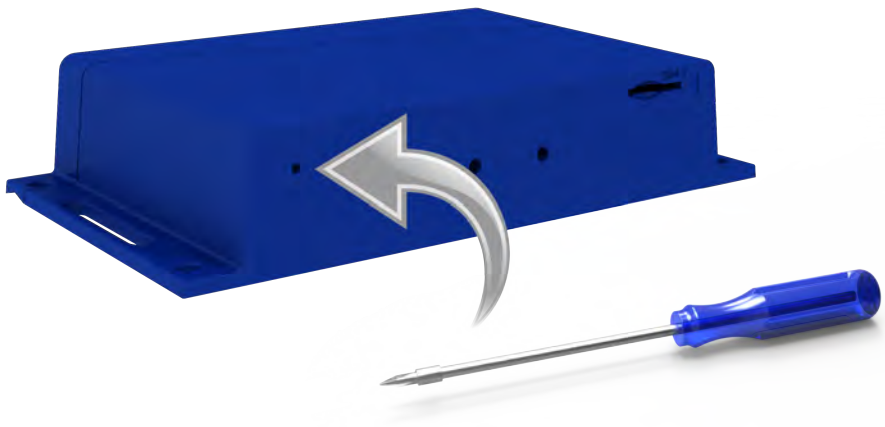

Figure 20: Router reset

We recommend backing up configuration of the router (see *Configuration manual*) because reset of the router sets the configuration to the default state.

It is important to distinguish between reset and reboot the router.

Action	Router behavior	Invoking events
Reboot	Turn off and then turn on router	Disconnect and connect the power, Press the *Reboot* button in the web configuration
Reset	Restore default configuration and reboot the router	Press *RST* button

Table 10: Description of reset and restart router

6. First Use

6.1 Connecting the Router Before the First Use

Before putting the router into operation it is necessary to connect all components which are required to run your applications. Don't forget to insert SIM card.

> The router can not operate without connected antenna, SIM card and power supply. If the antenna is not connected, router can be damaged.

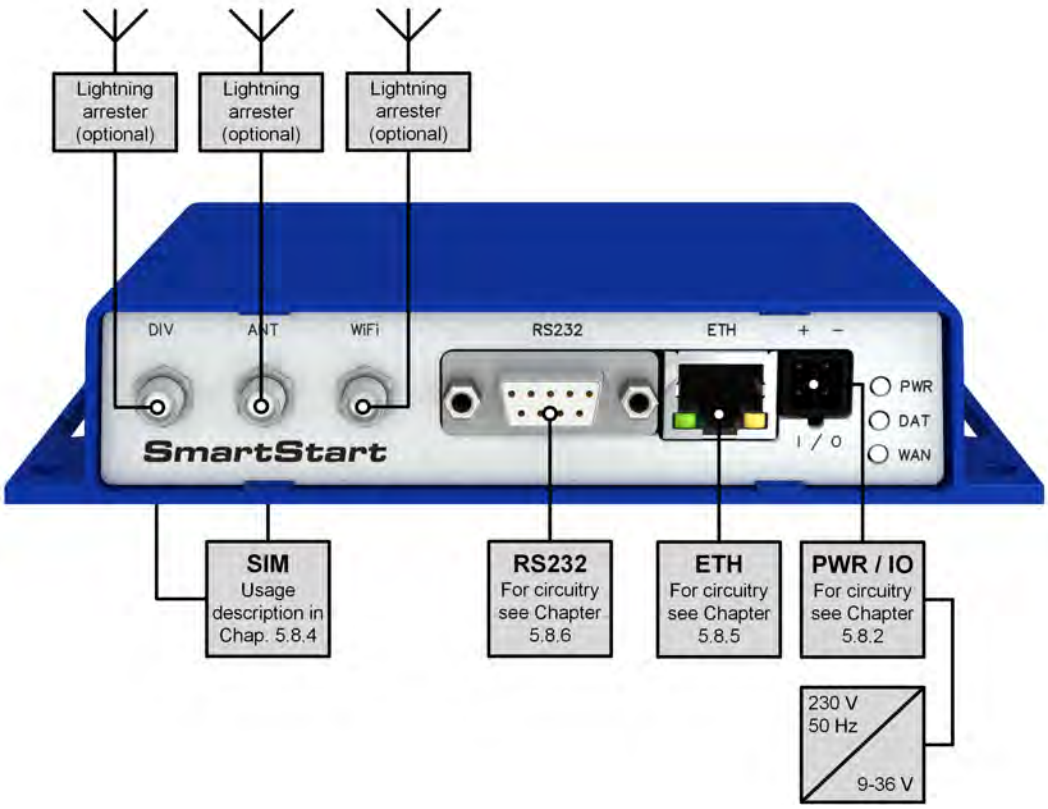

Figure 21: Router connection

6.2 Start

The router is put into operation when the power supply is connected to this router. By default, the router will automatically start to log on to the default APN. DHCP server will start to assign addresses for devices on the Ethernet port ETH. Router behavior can be changed via the web interface. This is described in detail in the *Configuration manual*.

6.3 Configuration

Attention! If no SIM card is inserted in the router, it is not possible to operate. Inserted SIM card must have activated data transmission.

6.3.1 Configuration over web browser

For status monitoring, configuration and administration of the router is available a web interface which can be accessed by entering the IP address of the router into the web browser. The default IP address of the router is 192.168.1.1. **Attention, it is necessary to use HTTPS protocol for secure communication over a network!**

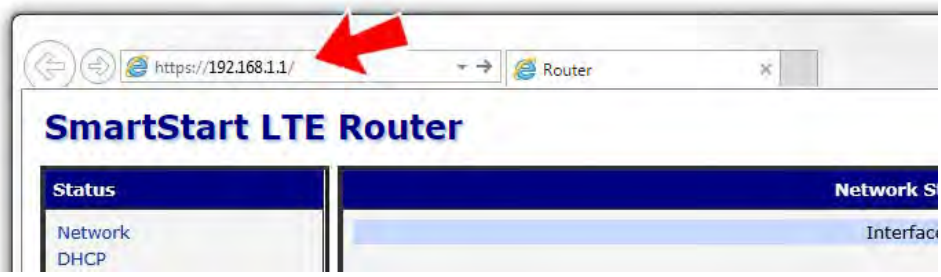

Figure 22: Entering the IP address of the router

Configuration may be performed only by the user "root" with default password "root".

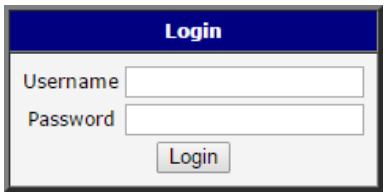

Figure 23: Entering login information

After successfully entering login information user gains access to the router via his internet browser.

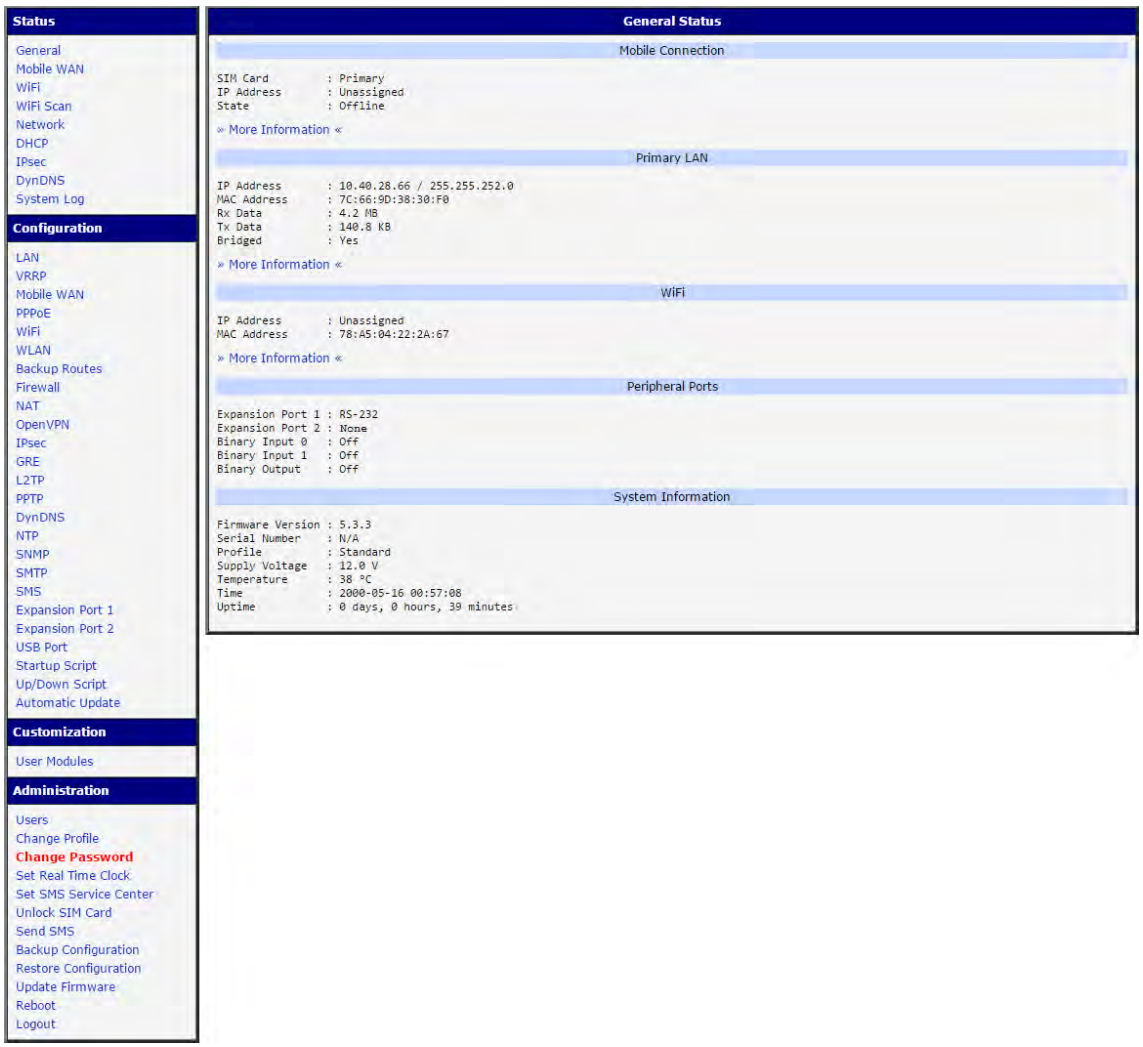

Figure 24: Router web interface

A detailed description of the router settings via the Web interface can be found in the document *Configuration manual*.

7. Technical Parameters

7.1 Basic Parameters

SmartStart		
Temperature range	Operating Storage	-40 °C to +75 °C -40 °C to +85 °C
Humidity	Operating Storage	0 to 95 % relative humidity non condensing 0 to 95 % relative humidity non condensing
Altitude	Operating	2000 m / 70 kPa
Degree of protection		IP30
Supply voltage		9 to 36 V DC
Consumption without WiFi	Average Maximum	2.1 W 4.8 W
Consumption with WiFi	Average Maximum	2.7 W 5.5 W
Sleep mode consumption		40 mW
Dimensions		30 x 87 x 150 mm (DIN 35 mm, EN 60715)
Weight		approximately 187 g (depends on interface)
Antenna connectors		2x SMA – 50 Ohm 1x R-SMA – 50 Ohm (**only for WiFi**)

Table 11: Basic parameters

* **Temperature range for routers equipped with WiFi module is reduced to -25 °C to +55 °C!**

7.2 Technical specification of user interfaces

	ETH	RS232
Connector	RJ45	DB9 Female
Standard	EN 1434	IEEE 802.3
Min. data rate	10 Mbps	300 bps
Max. data rate	100 Mbps	230400 bps
Max. total cable length (300 Bd, 200 nF/km)	100 m	20 m

Table 12: Technical specification of user interfaces

7.3 Standards and Regulations

The router complies with the following standards and regulations.

Standards and regulations	
EMC	ETSI EN 301 489-1 v1.9.2, IEC 61000-6-2:2005, IEC 61000-6-3:2006
Safety	EN 60950-1:2006 + A11:2009 + A1:2010 + A12:2011 + A2:2013, EN 62311:2008
REACH and RoHS compliant	

Table 13: Standards and regulations

7.4 Type Tests and Environmental Conditions

Phenomena	Test	Description	Test levels
ESD	EN 61000-4-2	Enclosure contact Enclosure air	± 6 kV (crit. A) ± 8 kV (crit. A)
RF field AM modulated	IEC 61000-4-3	Enclosure	10 V/m (crit. A) (80 – 2700 MHz)
Fast transient	EN 61000-4-4	Signal ports Power port Ethernet port	± 2 kV (crit. A) ± 2 kV (crit. A) ± 2 kV (crit. A)
Surge	EN 61000-4-5	Ethernet port Power port	± 2 kV (crit. A), shielded cab. ± 0,5 kV (crit. A)
RF conducted	EN 61000-4-6	All ports	10 V/m (crit. A) (0,15 – 80 MHz)
Radiated emission	EN 55022	Enclosure	Class B
Conducted emission	EN 55022	DC power ports Ethernet ports	Class B Class B
Dry heat	EN 60068-2-2	+75 °C, 40 % rel. humidity	
Cold	EN 60068-2-1	-40 °C	
Damp heat	EN 60068-2-30, test Db	+55 °C / +25 °C, 12 h – 12 h, 2 cycles,	
Temperature variation	EN 60068-2-14 Nb	-40 °C / +70 °C, 3 h / 3 h, 2 cycles, 3 K/min	
Vibration	EN 60068-2-64 ed. 2	Vibration, broadband random and guidance	
Isolation	EN 60068-2-27 ed. 2	15 g peak, 11 ms, half sin	

Table 14: Type tests and environmental conditions

7.5 Technical Parameters of Module

LTE module for NAM – Verizon	
LTE parameters	Bit rate 10 Mbps (DL) / 5 Mbps (UL) LTE FDD Cat.1, 3GPP release 9 compliant Supported bandwidths: 5 Mhz, 10 Mhz, 20 Mhz Supported frequencies: 700 / 1700(AWS) / 1900 MHz
Other parameters	Rx Diversity and MIMO DL 2x2 SMS over IMS

Table 15: Technical parameters of module for NAM – Verizon

7.6 Technical Parameters of WiFi

WiFi	
Antenna connector	R-SMA – 50 Ohms
Supported WiFi band	2.4 GHz
Standards	802.11b, 802.11g, 802.11n
2.4 GHz supported channels	1, 2, 3, 4, 5, 6, 7, 8, 9, 10, 11
RX Sensitivity	11b, 11 Mbps: typ. -85 dBm 11g, 54 Mbps: typ. -70 dBm (HT20) 11n, MSC7: typ. -66 dBm (HT40) 11n, MSC7: typ. -62 dBm
TX Output Power	11b, 11 Mbps: min. 18, typ. 19, max. 20 dBm 11g, 54 Mbps: min. 14.5, typ. 16, max. 17.5 dBm 802.11n (HT20): min. 13.5, typ. 15, max. 16.5 dBm 802.11n (HT40): min. 13.5, typ. 15, max. 16.5 dBm
Type of device	Access point, station

Table 16: Technical parameters of WiFi

7.7 Other Technical Parameters

Other technical parameters	
CPU power	2 DMIPS per MHz
Flash memory	256 MB
RAM	512 MB
M-RAM	128 kB

Table 17: Other technical parameters

8. Recommended Literature

[1] Advantech B+B SmartWorx: **Start Guide for SmartStart**,
[2] Advantech B+B SmartWorx: **SmartStart Configuration Manual**,
[3] Advantech B+B SmartWorx: **Commands and Scripts**.

9. Troubleshooting

If you can not connect to the router from your PC, your network card may be configured the way it is not possible to connect to the router. Take one or more of the following steps to solve the problem:

- Select the communication rate 10 MB/s in the properties of your network card.
- Connect the router to the PC via Switch.
- Connect the router to the PC, start the router first and then start the PC after the router's initialization.

9.1 FAQ

I have NAT enabled. My equipment is not connecting to the network.

- *The device's gateway has to be configured as the router.*

The router resets itself and the Ethernet connection fails.

- *The router will not function without an antenna. Keep the antenna as far as possible from the power supply.*

I can't access the Web server over NAT.

- *The remote HTTP access of the router has to be disabled, the default server address has to be your web server and the gateway of the web server has to be the IP of the router.*

Mobile WAN connection fails. (DAT LED off)

- *Check signal power. If the signal power is weak, you will have to use a better antenna. If the neighboring cells have a similar signal strength, you will need to use a directional antenna. For proper operation, the signal levels have to be in the range from -50 dBm to -90 dBm.*
- *It is necessary to set ping, which will check the connection and, in the case of failed ping, restart connection.*

Mobile WAN connection cannot be established. (DAT LED off)

- *Recheck GPRS settings – APN, name, password and IP address.*
- *Try to enter PIN – verify if the SIM card has the PIN code set.*
- *In a private APN, switch the DNS server send off.*
- *Switch the system log on and observe where the error occurs.*

✍ **Ethernet connection fails or isn't establishing.**

- *It is possible to turn auto negotiation off and set a rate and duplex manually on the Ethernet interface of the router.*

✍ **DynDNS doesn't function.**

- *With private APN this is not functional.*
- *If the same IP address is recorded in your canonic name as dynamically assigned address, it means that the operator is using NAT or firewall.*
- *Verify NAT using ping to the static server address.*
- *Verify Firewall accessing remotely to the router's Web interface.*
- *The operator may not provide the address of DNS server and without DNS server's adress it is impossible to connect to the dyndns.org server. There will be these messages in the system log:*
  - *DynDNS daemon started*
  - *Error resolving hostname: no such file or directory*
  - *Connect to DynDNS server failed*

✍ **L2TP or IPSec isn't establishing.**

- *Check the system log for error messages.*

✍ **I switched the router to offline mode by SMS message, but the router is in online mode after restart.**

- *SMS messages do not change the router configuration. They remain in effect only until the router is restarted.*

✍ **FTP doesn't function.**

- *Router doesn't support active FTP mode. It supports passive mode only.*

✍ **RS232 doesn't function.**

- *Verify that the router supports RS232 communications. Also verify the RS232 communication settings. To do so, open the router's configuration menu via the web browser, select the appropriate expansion port and verify the settings in the configuration menu.*

10. Customers Support

10.1 Global Customer Support

You can find up to date information about this product on our website:

www.bb-smartcellular.eu

Upkeep-advices:

- The SIM-card must be handled carefully as with a credit card. Don't bend, don't scratch on this and do not expose to static electricity.
- During cleaning of the router do not use aggressive chemicals, solvents and abrasive cleaners!

FCC compliance statement:

This equipment has been tested and found to comply with the limits for a Class B digital device, pursuant to Part 15 of the FCC Rules. These limits are designed to provide reasonable protection against harmful interference in a residential installation. This equipment generates, uses, and can radiate radio frequency energy and, if not installed and used in accordance with the instructions, may cause harmful interference to radio communications. However, there is no guarantee that interference will not occur in a particular installation. If this equipment does cause harmful interference to radio or television reception, which can be determined by turning the equipment off and on, the user is encouraged to try to correct the interference by one or more of the following measures:

- Reorient or relocate the receiving antenna.
- Increase the separation between the equipment and receiver.
- Connect the equipment into an outlet on a circuit different from that to which the receiver is connected.
- Consult the dealer or an experienced radio/TV technician for help.

Important: Changes or modifications to this product not authorized by Advantech B+B SmartWorx could void the electromagnetic compatibility (EMC) and wireless compliance and negate your authority to operate the product. This product has demonstrated EMC compliance under conditions that included the use of compliant peripheral devices and shielded cables between system components. It is important that you use compliant peripheral devices and shielded cables between system components to reduce the possibility of causing interference to radios, televisions, and other electronic devices.

10.2 Customer Support for NAM

Up to date product information is on the website:

www.bb-smartworx.com

For Technical Support:

Call 815-433-5100