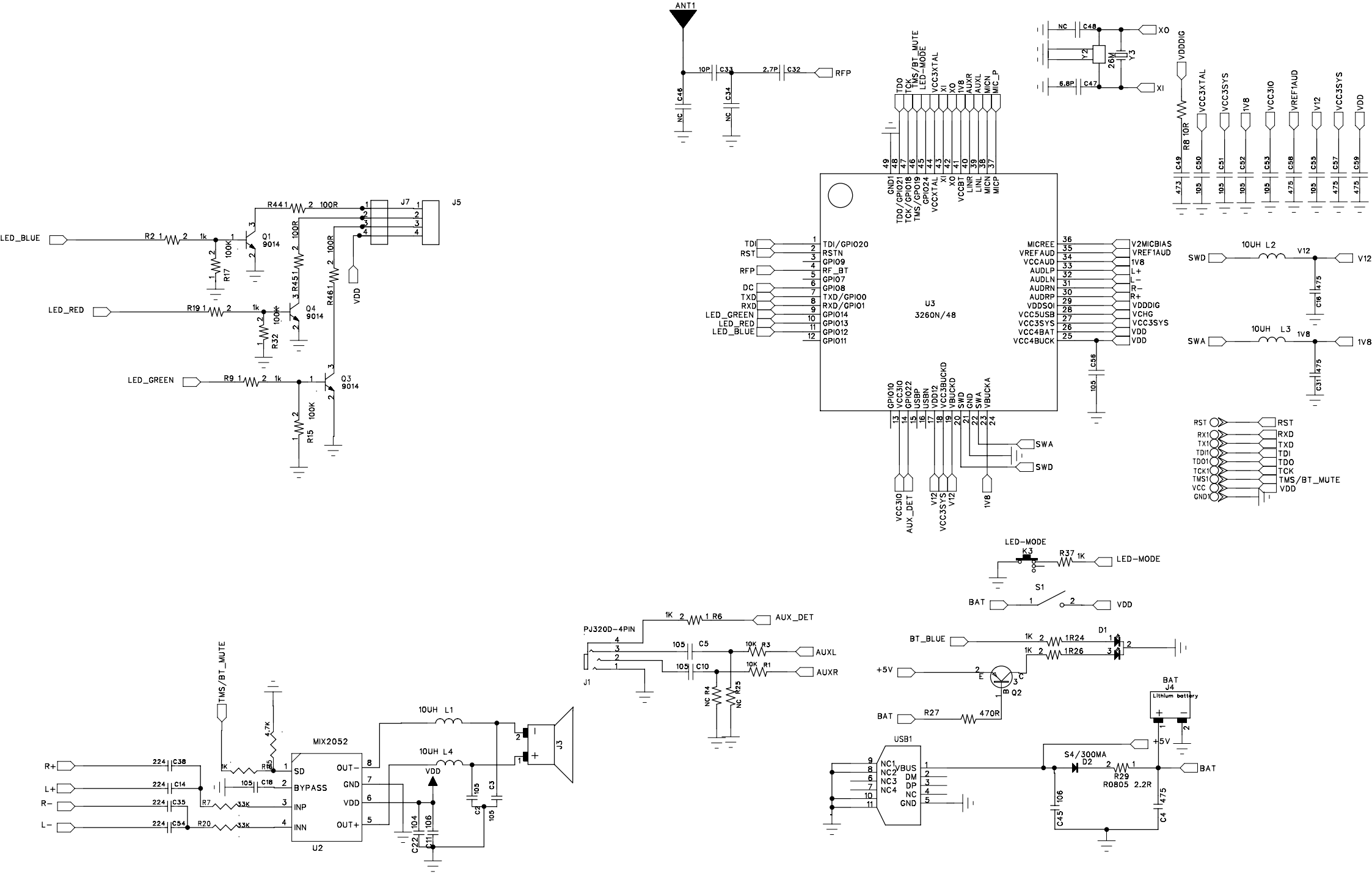
ANT1
10P C33
2.7P C32
RFP
C46 NC
C34 NC
TDO
TCK
TMS/BT_MUTE
LED-MODE
VCC3XTAL
XI
XO
1V8
AUXR
AUXL
MICN
MIC_P
NC C48
XO
Y2
26M
Y3
6.8P C47
XI
VDDDIG
R8 10R
VCC3XTAL
VCC3SYS
1V8
VCC3IO
VREF1AUD
V12
VCC3SYS
VDD
C49 473
C50 105
C51 105
C52 105
C53 105
C56 475
C55 105
C57 475
C59 475
GND1
TDO/GPIO21
TCK/GPIO18
TMS/GPIO19
GPIO24
VCCXTAL
XI
XO
VCCBT
LINR
LINL
MICN
MICP
TDI
RST
RFP
DC
TXD
RXD
LED_GREEN
LED_RED
LED_BLUE
TDI/GPIO20
RSTN
GPIO9
RF_BT
GPIO7
GPIO8
TXD/GPIO0
RXD/GPIO1
GPIO14
GPIO13
GPIO12
GPIO11
U3
3260N/48
MICREE
VREFAUD
VCCAUD
AUDLP
AUDLN
AUDRN
AUDRP
VDDSOI
VCC5USB
VCC3SYS
VCC4BAT
VCC4BUCK
V2MICBIAS
VREF1AUD
1V8
L+
L−
R−
R+
VDDDIG
VCHG
VCC3SYS
VDD
VDD
C56 105
GPIO10
VCC3IO
GPIO22
USBP
USBN
VDD12
VCC3BUCKD
VBUCKD
SWD
GND
SWA
VBUCKA
SWA
SWD
VCC3IO
AUX_DET
V12
VCC3SYS
V12
1V8
SWD
10UH L2
V12
V12
C16 475
SWA
10UH L3
1V8
1V8
C31 475
RST
RX1
TX1
TDI1
TDO1
TCK1
TMS1
VCC
GND1
RST
RXD
TXD
TDI
TDO
TCK
TMS/BT_MUTE
VDD
LED-MODE
K3
R37 1K
LED-MODE
S1
BAT
VDD
LED_BLUE
R2 1k
Q1 9014
R17 100K
R44 100R
R45 100R
R46 100R
J7
J5
VDD
LED_RED
R19 1k
Q4 9014
R32 100K
LED_GREEN
R9 1k
Q3 9014
R15 100K
PJ320D-4PIN
J1
1K R6
AUX_DET
C5 105
C10 105
10K R3
10K R1
AUXL
AUXR
NC R4
NC R25
BT_BLUE
1K R24
1K R26
D1
+5V
Q2
BAT
R27 470R
BAT
J4
Lithium battery
USB1
NC1
NC2
NC3
NC4
VBUS
DM
DP
NC
GND
S4/300MA
D2
R29 R0805 2.2R
+5V
BAT
C45 106
C4 475
TMS/BT_MUTE
4.7K
R35 1K
MIX2052
SD
BYPASS
INP
INN
OUT−
GND
VDD
OUT+
U2
R+
L+
R−
L−
224 C38
224 C14
224 C35
224 C54
R7 33K
R20 33K
105 C18
10UH L1
10UH L4
VDD
C22 104
C11 106
C2 105
C3 105
J3