Laser Light Projector User's Manual

Shenzhen Optlaser Technologies Co., Ltd

Model: AL-RG130-RM1

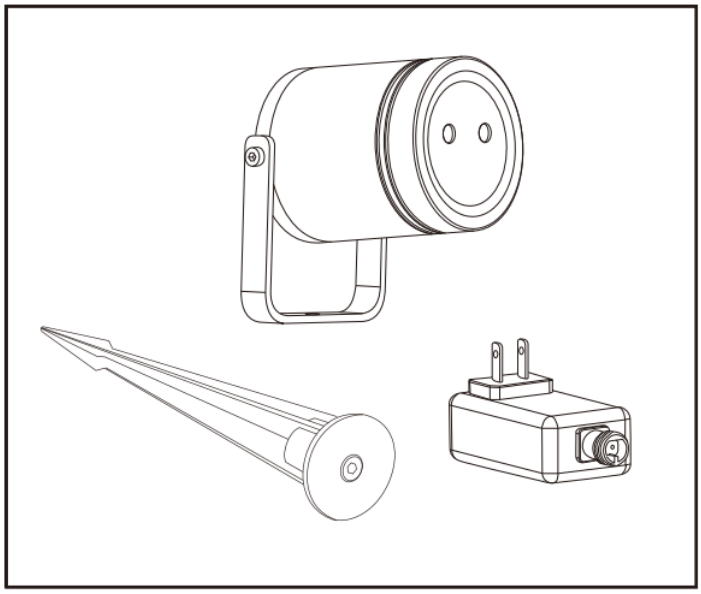

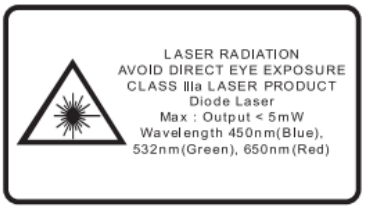

WARNING:
Use provided
transformer only.

Warning: To reduce risk of injury, the user must read and understand this user manual before using the laser lights. This item is intended for home use only in accordance with the instructions provide in this manual.

CAUTION: Do not allow children to play with this item, it is not a toy!

Please read these instructions carefully and retain for future use.

IMPORTANT SAFEGUARDS

To reduce the risk of fire, electric shock, or injury when using any electric appliance, precautions should be made.

These precautions include but are not limited to:
. Read all instructions.
. Carefully position in such a way that pets and children cannot stare directly at the laser.
. Do Not attempt to open the protective housing or operate the device if the aperture windows are damaged. If the unit requires service that involves removing the protective housing, contact the manufacturer. Opening the protective housing voids the warranty.

CAUTION!
The user is cautioned that changes or modifications not expressly approved by the party responsible for compliance could void the user's authority to operate the equipment.

This device complies with Part 15 of the FCC Rules. Operation is subject to the following two conditions: (1) this device may not cause harmful interference, and (2) this device must accept any interference received, including interference that may cause undesired operation.

Use only as directed. Do not look directly at the laser. Improper use may result in damage to the eyes due to direct exposure to laser radiation.

You may plug this device directly into an indoor power socket OR if an extension lead is required, it must be of a type suitable for outdoor use. Any outdoor connection must be completely dry before use and should be protected by a proprietary outdoor waterproof enclosure.

Residual Current Device (RCD) protection is recommended to be used on the circuits or outlets while operating this laser light outdoors or in a wet location. Receptacles with built-in RCD protection are available for this purpose.

NOTE: This equipment has been tested and found to comply with the limits for a Class B digital device, pursuant to Part 15 of the FCC Rules. These limits are designed to provide reasonable protection against harmful interference in

a residential installation. This equipment generates, uses and can radiate radio frequency energy and, if not installed and used in accordance with the instructions, may cause harmful interference to radio communications. However, there is no guarantee that interference will not occur in a particular installation.

If this equipment does cause harmful interference to radio or television reception, which can be determined by turning the equipment off and on, the user is encouraged to try to correct the interference by one or more of the following measures:

-- Reorient or relocate the receiving antenna.

-- Increase the separation between the equipment and receiver.

-- Connect the equipment into an outlet on a circuit different from that to which the receiver is connected.

-- Consult the dealer or an experienced radio/TV technician for help.

GENERAL INFORMATION

This laser product is comply with a CLASS 3A laser product to the requirements of the US Federal Laser Product Performance Standard (FLPPS) contained in the regulations in 21 CFR Sub-chapter J. CLASS 3A laser products can be hazardous when directly viewed.

Avoid direct viewing of a CLASS 3A laser energy. For reference the FLPPS requirements for demonstration laser products like laser pointers are limited to CLASS 3A levels of laser energy, this product uses diffractive optics to scatter the beam energy, this scattering effect causes the energy concentration to drop below the exposure limits for momentary or accidental viewing at relatively short distance from the laser aperture. As similar with all bright light sources, when you operate

this device in unsupervised general public areas, it is recommended that up close access to the laser lights be restricted or prevented.

This laser display device incorporates a CLASS 3A laser system which, by itself, may be hazardous. However, this laser display device incorporates a protective housing and diffractive holographic optics in the machine design such that there is no exposure or human access to laser radiation during operation or maintenance above the CLASS 3A limits. Each individual laser beam power is under 5mw which is less than a standard laser pointer.

SAVE THESE INSTRUCTIONS

BEFORE USE

Carefully unpack package contents to make sure all parts are present some assembly is required:

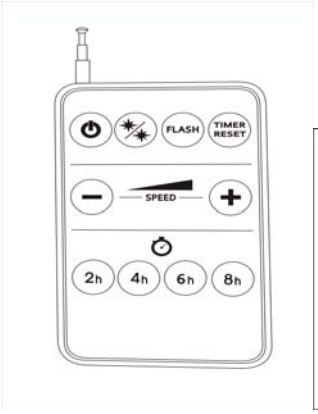

(1) Remote

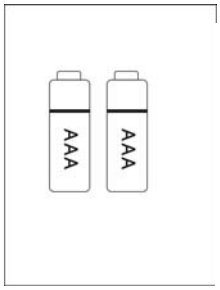

(2) 2x AAA batterys

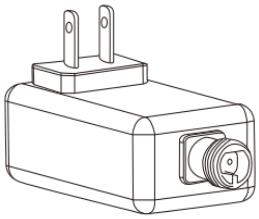

(3) AC Adapter for Laser Projector

(4) Ground stake with screw

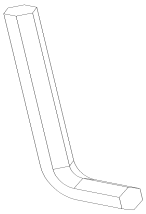

(5) Allen key

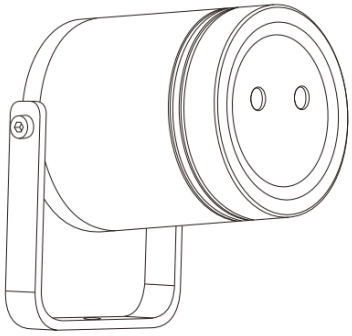

(6) Light projector

DO NOT PULG IN LASER UNIT UNTIL PROMPTED IN THE STEPS BELOW .
If you already have, unplug it now and follow the steps below in order.

ASSEMBLY

. To attach the ground stake, remove the screw and washer from the stake using the Allen key;
. Use the same screw & washer to attach the stake to the pivot mount (See assembly diagram “1”).
Plug the 2-prong adapter into the outlet on the power supply transformer.
Screw on the weather resistant cap tightly to help protect the connection from the weather (See assemble diagram “2”)
Insert the stake into the ground. Be careful to avoid other wires or hoses.
Position the projection by loosening and tightening the angle adjustment screws, using the Allen key (See assembly diagram “1”).

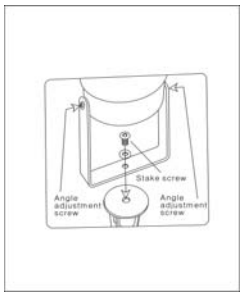

Assembly diagram 1

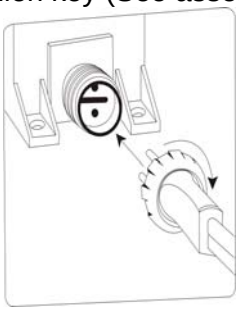

Assembly diagram 2

REMOTE CONTROL GENERAL INFORMATION

First, install the included 23A battery in the remote. To test the remote's battery connection, press any button and the LED will illuminate for 1 second.
If the LED does not illuminate, check and make sure you have installed battery according to the correct polarity.

THE REMOTE CONTROLLER

ON/OFF: To turn the device on & off
COLOUR: color change，Red-Green-Red Green
Flash : Controls the speed at which the laser flashes (Slow, Medium, Fast or Static)
Speed : Controls the speed at which the laser rotates (Slow, Medium, fast or Static)
2H: Turns the laser off after 2 hours of use.
4H: Turns the laser off after 4 hours of use.
6H: Turns the laser off after 6 hours of use.
8H: Turns the laser off after 8 hours of use.
Timer Reset: Turns on the timer function. Press before selecting the required time limit. If no time limit is set, the light will turn off after 6 hours.

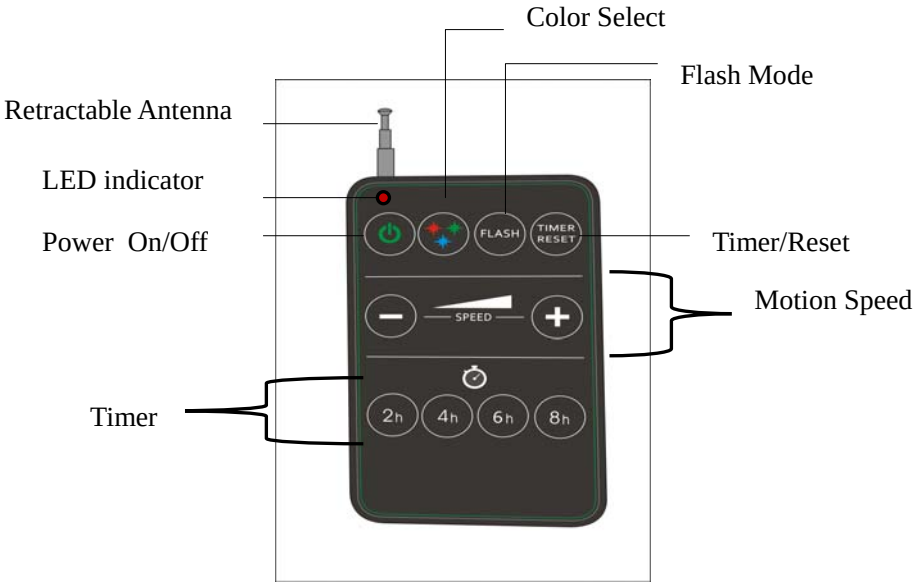

SYNCING THE REMOTE

- With your remote ready (battery installed) and making sure you are within range of the laser (approx. 10m). Plug in the laser projector power supply adapter to the power source.
- With 1 minute after plugging in the laser, press the ON/OFF button on your remote for 5 seconds to sync it to the laser projector.
- Do not press the ON/OFF button at the same time you plug in the adapter to the power supply.
- You can sync up to 4 laser projectors with one remote control.
- Occasionally, re-syncing the remote with the laser projector may be necessary.
- To re-sync, unplug the laser projector from the power source, then repeat the first two steps.
- To sync more than one laser projector, unplug them all, wait 1 minute, then plug them back in at the same time, then press the ON/OFF button within 5 seconds.
- Remove the battery from the remote if you are planning on storing the laser projector for a long period of time.

For better signal reception please pull out the antenna as much as possible.

Make sure the the battery's positive and negative poles are correct and in good contact with the metal connection.

电池与电池弹片要接触到位

NOTES:

- Only use supplied AC adapter connected to a properly grounded outdoor outlet.
- Do not use with dimmers.
- Operate in temperatures of -20℃-35℃（-15℉ ~ 95℉）. There will be a delay if operating at a temperature of -20℃ (-10℉). Please allow up to 10 minutes for light to warm up and reach its full projection.
- Timer inside: 6 hours power on and 18, every 24 hours a cycle;
- When handing the RG laser projector, for safety purposes it is recommended to mount using a sturdy handing clamp and safety cable.

PRODUCT SPECIFICATIONS

Laser Classification	Class IIIa
Maximum Laser Classification	(Single beam) Less than 5mW
Laser Wavelength	Green: 532nm Red: 650nm
Lifetime	8,000 hours approx.
Power Consumption	Up to 10 watt
Power Input for Laser Projector	120V(when used with supplied AC adapter)
Operation	Indoor/Outdoor
Operation Temperature	-20℃~35℃(-10℉~95℉)
Projection Coverage	5,000 Sq Ft = 71’ x 71’
Warranty	12 months

TROUBLE SHOOTING

Problems	Solutions
Light doesn’t come on	Check the product is plugged in and switched on at the mains. Check socket works with an alternative electrical product. Replace fuse in plug.
RG laser projector is making unusual noises or smells.	Switch product off immediately and disconnect from power socket. Return product to supplier.