ITEM NO.	PART NUMBER	DESCRIPTION	QTY.
1	11.0769	DREAM SOCK WITH HN OBL PROGRAMMED PCBA - US	1
2	13.0193	M3 OBL LIGHT PIPE	1
3	13.0102	V3 OBL SPACER	1
4	13.0103	V3 OBL WEIGHT	1
5	13.0104	V3 OBL BUTTON	1
6	11.0565	Dream+HN V4 OBL SHELL	1
7	13.0144	V3 OBL NEODYMIUM MAGNET	1
8	13.0154	V3 OBL SCREW	4
9	13.0155	V3 OBL LIGHT BLOCKING STICKER	1
10	13.0169	V3 OBL MAGNET FOAM	1
11	11.0050	V3 OBL CHARGE DISH	1
12	12.0198	V3 OBL CHARGE DISH POGO PIN	1
13	11.0564	DREAM+HN RX OBL BUTTON PAD WITH ADHESIVE	1
14	11.0594	DREAM SOCK WITH HN OBL BUTTON PAD LABEL W/ ARTWORK - US	1

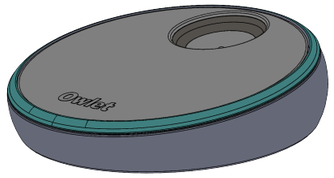

REVISIONS

REV.	DESCRIPTION	ECO NUMBER
01	INITIAL RELEASE	ECO-000375
02	Revising up for Krypton firmware update	ECO-000455

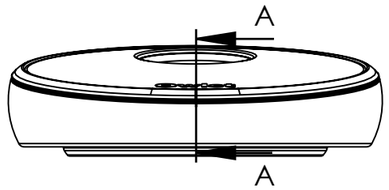

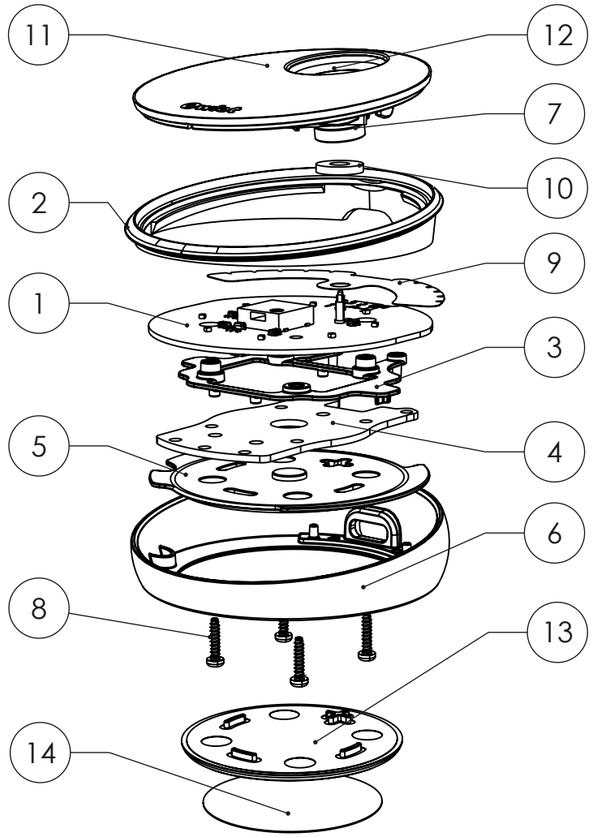

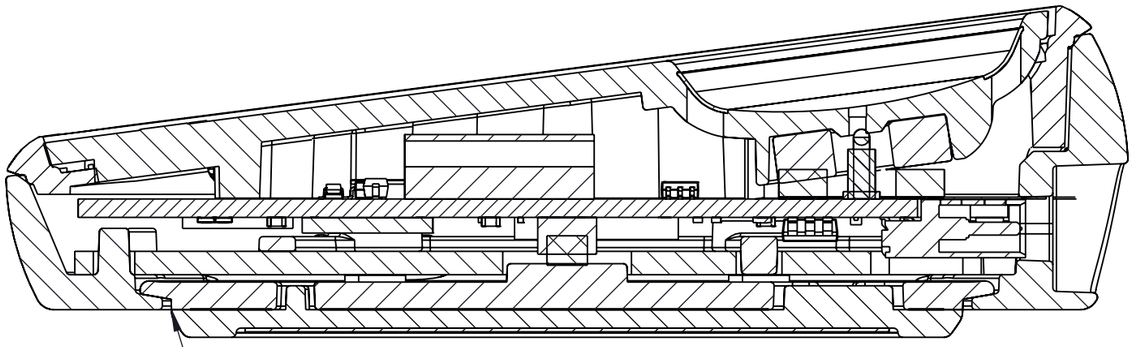

SECTION A-A
SCALE 3 : 1

ACCEPTABLE GAP 0 - 0.4mm

LISTED DIMENSIONS WILL CONFORM WITH THE FOLLOWING TOLERANCES (UNLESS OTHERWISE NOTED):
0 = ± 1
0.0 = ± 0.5
0.00 = ± 0.20
0 DEG = ± 2 DEG
(0.0) = REFERENCE

CERTIFICATE OF CONFORMANCE TO INCLUDE PART NUMBER, REVISION, SUPPLIER LOT NUMBER, QUANTITY, AND MATERIAL

ALL DIMENSIONS ARE IN MILLIMETERS UNLESS OTHERWISE NOTED

MATERIAL: SEE SEPARATE PARTS

COLORS: SEE SEPARATE PARTS

FINISH: SEE SEPARATE PARTS

ALL DIMENSIONS ARE EXPECTED TO MATCH CAD WITHIN ± 2 UNLESS OTHERWISE SPECIFIED

OWLET BABY CARE

DESCRIPTION: DREAM SOCK + HN BASE STATION ASSEMBLY - US

PART NUMBER: 11.0772

A3

SCALE: DNS

SHEET 1 OF 1