cover

Bluetooth®

TX-38

WIRELESS HEADPHONES

BC

pages 1 & 2

1

Package Contents:

- TX-38 Wireless Headphones
- USB Charging Cable
- 3.5 mm Audio Cable
- Instruction Manual
- Carrying Pouch

Specifications:

Bluetooth® Version: 5.3
Working distance: 33 ft
Charge Connector: USB Type-C
Frequency Response: 20Hz - 20kHz
Internal Battery: 3.7V, 400 mAh
Rechargeable Lithium-ion
Charge time: 2.5 hrs
StandbyTime: 100 hrs
Talking/Music time: About 40 hours

2

Operation Guide

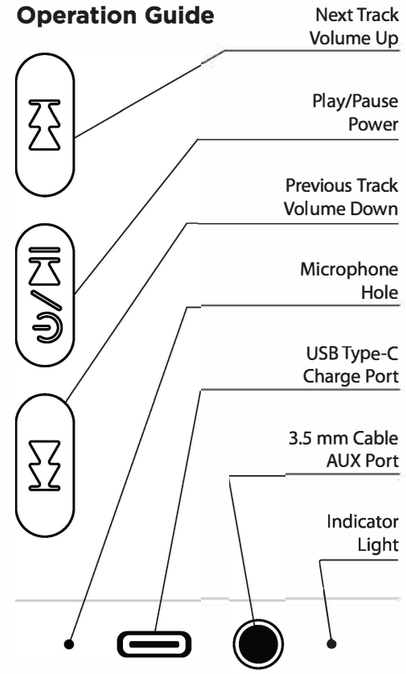

These controls and ports are on the left ear cup

pages 3 & 4

3

Getting Started

Before using this device, fully charge it. Charging instructions can be found on page 6.

Do not wear the headphones while setting up, the voice prompt is loud. Press and hold the Power button until the indicator LED flashes red and blue.

Pairing

1. Go to Bluetooth® Settings on your mobile device.
2. Turn Bluetooth® ON, on your device.
3. On your Bluetooth® device, select " TX-38" from the list of available devices.
4. When successfully paired, the indicator LED will be solid blue. You can now put on the headphones.

Bluetooth® Functions

- Long press the Power button to turn the headphones on or off.

Note: Once they are paired, the headphones will recognize your device, it is not necessary to set up the pairing again.

4

- Long press the Next Track button to skip to the next track. Short press the button to increase volume.
- Short press the Play / Pause button to play or pause. Long press the button to power on or off. Double press the Power button to activate or turn off **Active Noise Cancelling**.

  When a phone call is incoming, short press Play / Pause to answer, long press to reject the incoming call.
- Long press the Previous Track button to restart the current track. Short press the button to decrease volume.

3.5 mm AUX Cable Use

The cable allows for headphone use when power or Bluetooth® are not available. You will need to use your device to control the playback.

pages 5 & 6

5

Troubleshooting

Headphones do not pair with device:

1. Turn the headphones off.
2. Restart your device.
3. Turn the headphones on.
4. Try pairing again.

Headphone buttons do not work:

1. Turn the headphones off, and then back on again.

If any of these problems persist, the headphones may need to be charged. Charging instructions can be found on page 6.

If charging and re-pairing does not solve the issue, you may have a defective device, please see the warranty information on page 9.

6

Charging

1. Connect the USB Type-C charging cable to the charging port on the bottom of the left earcup.
2. Plug the cable into a standard USB 5V/1A or higher power output.

When you plug the headphones into a charging mechanism, the indicator LED will glow solid red. This means the internal battery is being charged.

When the indicator LED light turns to solid blue, this means the headphones are fully charged and ready to use.

3. When fully charged, unplug the charging cable from the power source.

pages 7 & 8

7

Warnings

- Do not use this unit for anything other than its intended use.
- Do not puncture, throw, drop, bend, or modify this product.
- Do not throw this product into fire or water.
- Do not short-curcuit the battery with any metal or metallic objects.
- Do not expose this product to corrosive liquids such as salt water.
- Do not operate the unit if it has been wet or moist to prevent against electric shock and/or injury to yourself and damage to the unit.
- Do not allow children to play with this product as it is not a toy, and may present a choking hazard.
- Avoid leaving your device in direct sunlight, such as on the dashboard, console, or seat of a vehicle.
- Do not leave your device, or use your device, in any area where the temperature is likely to drop below 32°F, or may exceed 140°F, such as inside a closed vehicle on a hot day.
- Repairs to electrical equipment should only be performed by a qualified electrician. Improper repairs may place the user at serious risk.
- Protect your hearing by always listening at a safe level. Prolonged use at elevated volumes may affect your hearing capacity and could result in hearing loss.
- To avoid damage to the headphones, please only use a USB 5V/1A or higher charger.
- In order to ensure the battery life, charge normally at least once a month.

FCC FCC ID: 2AHN6-AUBO105

This device complies with Part 15 of the FCC Rules. Operation is subject to the following two conditions: (1) this device may not cause harmful interference, and (2) this device must accept any interference received, including interference that may cause undesired operation.

Note: This equipment has been tested and found to comply with the limits for a Class B digital device, pursuant to part 15 of the FCC Rules. These limits are designed to provide reasonable protection against harmful interference in a residential installation. This equipment generates, uses and can radiate radio frequency energy and, if not installed and used in accordance with the instructions, may cause harmful interference to radio communications. However, there is no guarantee that interference will not occur in a particular installation. If this equipment does cause harmful interference to radio or television reception, which can be determined by turning the equipment off and on, the user is encouraged to try to correct the interference by one or more of the following measures:

- Reorient or relocate the receiving antenna.
- Increase the separation between the equipment and receiver.
- Connect the equipment into an outlet on a circuit different from that to which the receiver is connected.
- Consult the dealer or an experienced radio/TV technician for help.

RF warning statement:
The device has been evaluated to meet general RF exposure requirement. The device can be used in portable exposure condition without restriction.

back

8 9

Caution: Any changes or modifications not expressly approved could void the user's authority to operate the equipment.

Warranty

Bytech NY INC. warrants this product to be materially free from defects and workmanship to the original purchaser for a period of 12 months from the original purchase date. Bytech responsibility with regard to this limited warranty shall be limited solely to repair or replacement at its option, of any product which fails during normal consumer use. This warranty does not extend to damage or failure which results from misuse, neglect, accident, alteration, abuse, improper installation or maintenance. At any time during the 12 months period following the purchase, the product fails due to defects in material or workmanship, return the defective product (with freight prepaid) with proof of purchase.

MADE IN CHINA

印制红色框内的尺寸和内容，折叠后单页的尺寸为76.2mmW*127mmH

TX-38 User Manual v1.1 041224

Black ink only, thin glossy paper, accordion fold, 5 sheets front & back