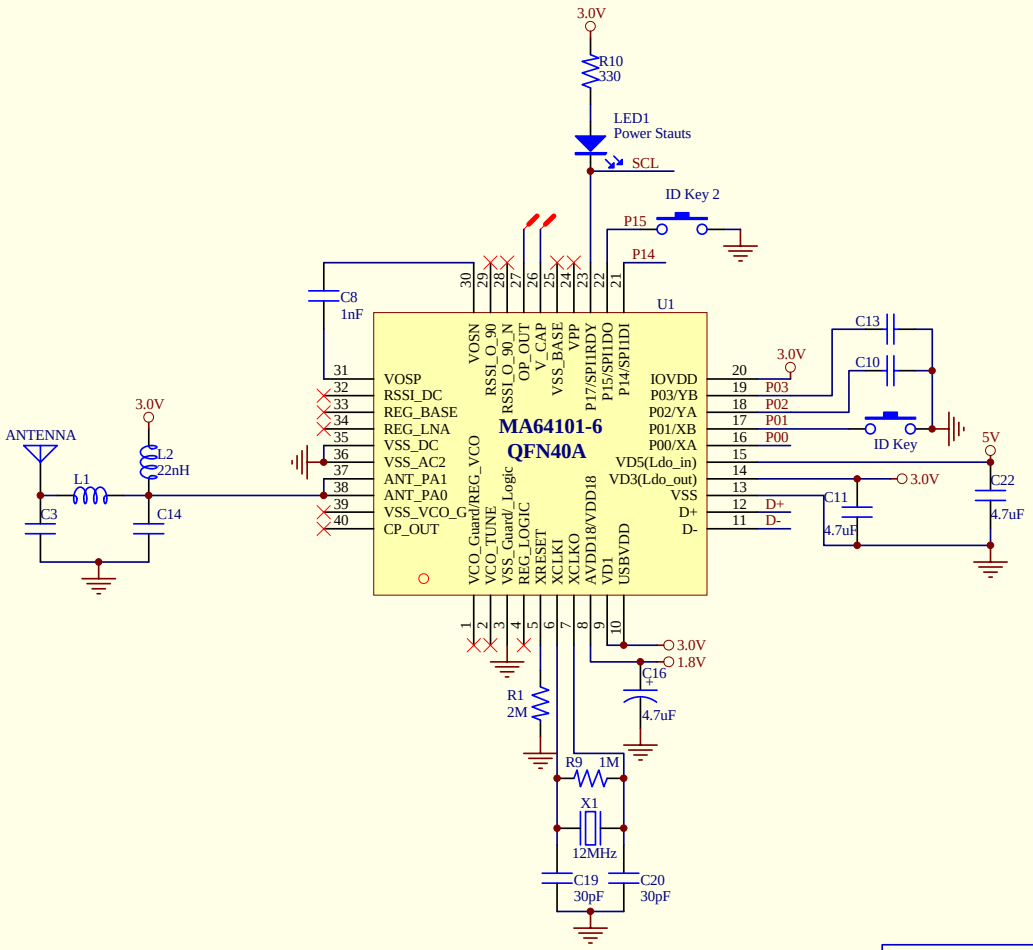

P00	USB TYPE
NC	**2.4G Keyboard Mouse**
GND	**2.4G Wireless Mouse**

P03	USB TYPE
C13=NC	**2.4G Keyboard Mouse**
C13=0R	**2.4G Wireless Mouse**
C13=0.1uF	**2.4G Wireless Mouse + Mouse Media -->Alt+Tab**

P16 (for dice)	P02	Keymatrix mode
NC	C10=NC	**Standard key (FN+F11=key Lock)**
NC	C10=0R	**88 key (FN+F11=key Lock)**
NC	C10=0.1uF	**Standard key + Fn+F1...F12=Media keys**
GND	C10=NC	**Standard key + Fn keys Function for SQT**
GND	C10=0R	Reserve
GND	C10=0.1uF	Reserve

P14	Connect Mode
NC	Normal
GND	For MA3802 None EEPROM

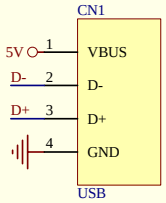

MA64101-6(Non-EEPORM)

MosArt Semiconductor corp.

Revision **V1.3**

sheet **1** of **1**

Date: **2014/05/12** Drawn By: **Jeremy**