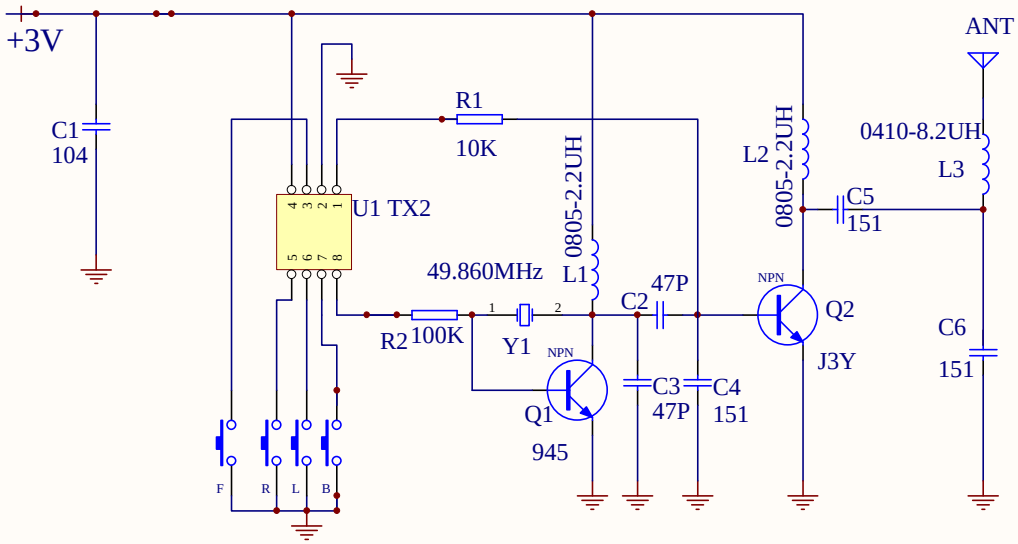
+3V
C1
104
R1
10K
U1 TX2
4 3 2 1
5 6 7 8
0805-2.2UH
L1
49.860MHz
R2
100K
1
2
Y1
NPN
Q1
945
C2
47P
C3
47P
C4
151
L2
0805-2.2UH
NPN
Q2
J3Y
C5
151
ANT
0410-8.2UH
L3
C6
151
F
R
L
B

TS- 589T- 49M