WATERLEAK-X-SYSYTEMS

CENTRAL CONTROL UNIT (CCU) BLOCK DIAGRAM (SHADED AREA IS CCU/VCU PCB)

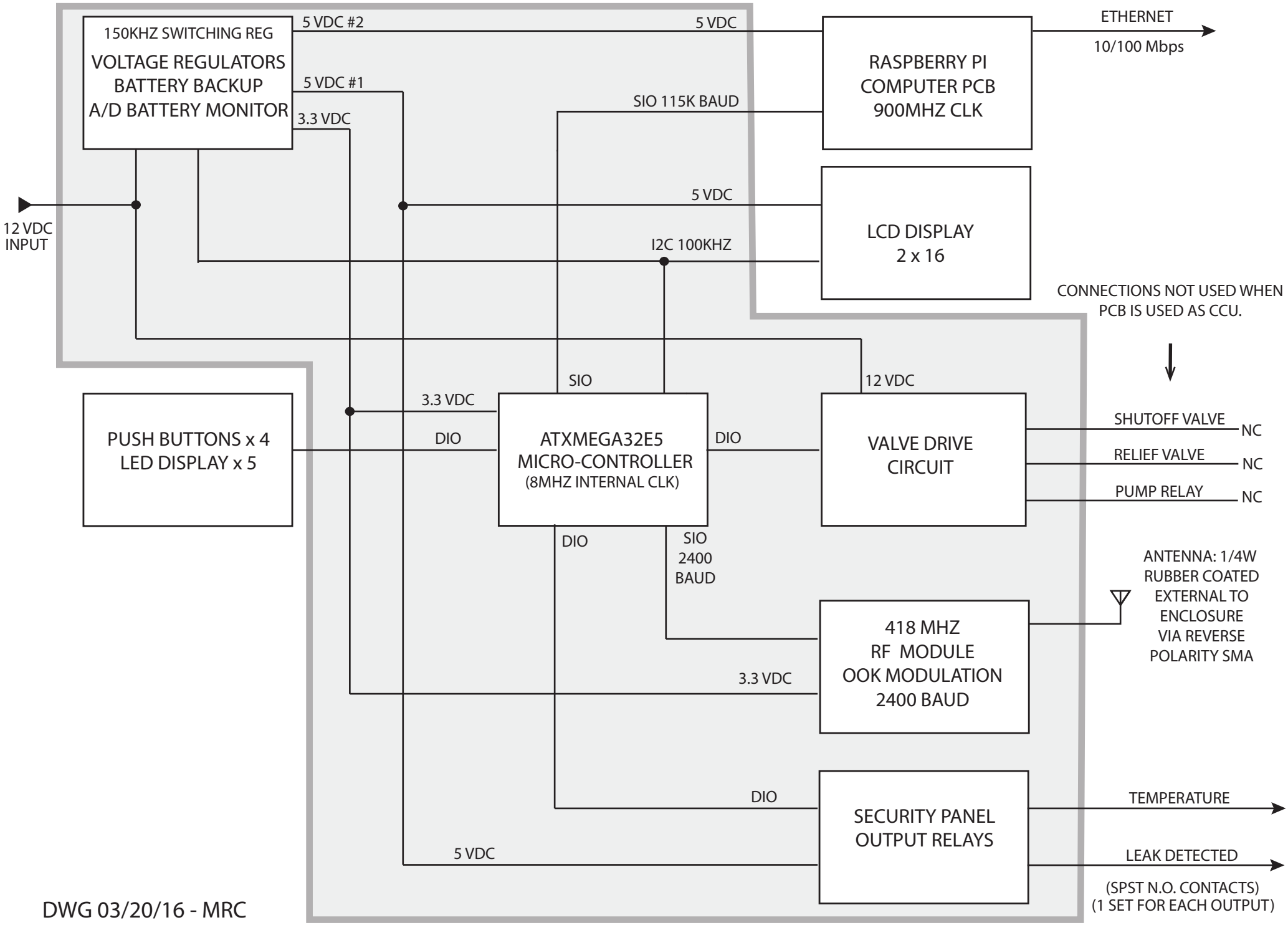

DWG 03/20/16 - MRC