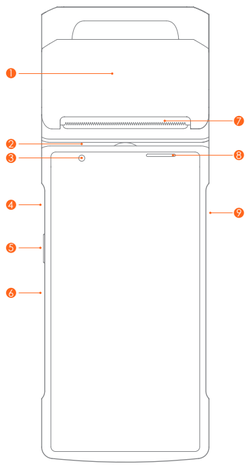

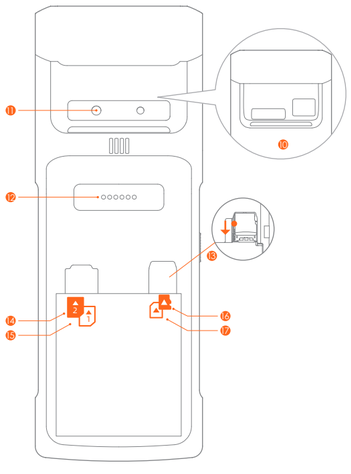

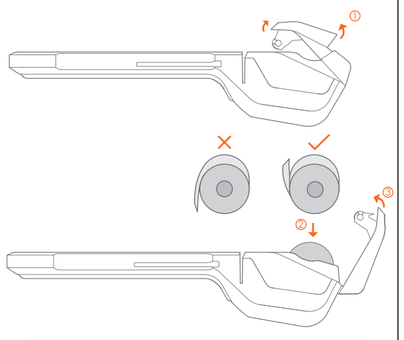

快速入门指南

❶ NFC 读卡器
用于感应闪付卡。

❷ 磁卡读卡器
用于刷银行卡磁条信息。

❸ 前置摄像头(可选)
支持拍照及1D/2D快速扫码。

❹ Type-C 接口
可用于给设备充电和开发者调试使用。

❺ 功能定义键
快捷进入相应功能。

❻ 电源键
短按：点亮屏幕，锁定屏幕。
长按：关机状态下，长按 2-3 秒开机；
使用状态下，长按 2-3 秒，可选择关机或重启；
死机状态下，长按 11 秒，自动重启。

❼ 打印机
用于开机状态下打印单据。

❽ 指示灯
用于提示刷卡业务步骤。

❾ IC卡读卡器
用于插入银行芯片卡。

❿ 二维码扫码头(选配)
用于读取商品码和手机支付码。
注意：禁止直视扫描头，避免对眼睛造成损伤。

⓫ 后置摄像头
支持拍照及1D/2D快速扫码。

⓬ 扩展接口
用于链接底座。

⓭ 向下滑动金属扣，取出Nano SIM

⓮ PSAM卡槽（SIM卡可选）
用于插入PSAM卡（SIM卡可选）。

⓯ PSAM卡槽
用于插入PSAM卡。

⓰ Micro SD卡槽
扩展SD卡接口。

⓱ Nano SIM卡槽
打开电池盖，取出电池，按图示方向插入SIM卡。
(SIM卡支持移动:2G/4G、联通:2G/3G/4G、电信:4G)

打印说明

本机支持 58mm 热敏打印纸，规格为 57±0.5mm×Ø40mm
·请通过开盖提手开启打印纸仓(图示①)，勿强行打开纸仓，防止打印头齿轮磨损；
·按照图示方向，将打印纸正确放入纸仓，并拉出部分纸至切刀外(图示②)；
·盖好纸仓盖，打印纸安装完成(图示③)。
注意：如果打印内容空白，请检查纸卷方向是否放反。

系统预置软件列表

· 应用市场 · 推送服务 · 用户反馈 · 数据服务 · 启动器 · 硬件管家
· 功能键自定义 · BaseService · 定制服务(壁纸、开机动画)
· 开发者指南(调试小助手) · 使用指南 · 开机指导 · 远程协助 · OTA

以上软件详细信息查询方法：选择“设置->应用”，选择相应软件名称进行查看信息；软件卸载方法：选择“设置->应用->管理应用->卸载”卸载应用；或长按图标，拖曳到垃圾桶卸载。

注意事项

安全警告
· 请将交流电插头插入与配件电源适配器上标识输入相对应的交流电插座中；
· 此为A级产品。在生活环境中，该产品可能会造成无线电干扰。在这种情况下，可能需要用户对于干扰采取切实可行的措施。
· 不能在非安全区域打开设备。
· 请勿在危险场所充电。
· 关于电池的更换：
① 用错误型号电池更换会有爆炸危险！
② 更换后的旧电池应交维修人员处置，切勿把它投入火中！

重要安全说明
· 避免在雷电期间安装或使用，否则有被雷电击的危险；
· 当您发现有异常气味，过热或烟雾情形下，请立刻切断电源；
· 撕纸刀较锋利，请勿触碰！

建议
· 不要在极端冷、热环境中使用，例如靠近火源或点燃的香烟；
· 不要摔、投掷或弯折；
· 尽量在清洁无尘环境中使用，避免细小物品落入终端中；
· 在未获允许的情况下，不要在医疗设备附近使用。

声明
本公司不对以下行为负责
· 不在本指南说明的条件下使用和维护所造成的损坏；
· 对于因选件或耗材(非本公司提供之最初产品或认可产品)造成的损坏或问题；(未经本公司同意，无权进行产品修改或变动)
· 本产品的操作系统支持官方的系统更新，如果用户刷了第三方的ROM系统或者采用破解方式修改了系统文件，可能会导致系统不稳定，以及带来安全风险和安全威胁。

免责申明
由于产品的更新，此文档的某些细节可能与产品不符，请以实物为准，此文档的解释权归本公司。保留不预先通知的情况下，修改本说明书的权利。

警告标志
警告：仅使用原装电池
警告：可能存在爆炸性气体时请勿更换电池
警告：请勿在危险场所充电

本产品有毒有害物质名称及含量标识表

部件名称	有毒有害物质或元素					
	铅 (Pb)	汞 (Hg)	镉 (Cd)	六价铬 (Cr(VI)	多溴联苯 (PBB)	多溴二苯醚 (PBDE)
电路板组件	×	○	○	○	○	○
结构件	○	○	○	○	○	○
包装件	○	○	○	○	○	○

○：表示该有毒有害物质在该部件所有均质材料中的含量均在SJ/T11363-2006规定的限量要求以下。

X：表示该有毒有害物质至少在该部件的某一均质材料中的含量超出SJ/T11363-2006规定的限量要求；但是上表中打“×”的部件，其含量超出是因为目前业界还没有成熟的可替代的技术。

对达到或超出环保使用年限的产品，应依据《电子信息产品控制管理办法》规定进行回收再利用，不应随意丢弃。

产品保修卡

产品名称：_____
产品型号：_____
产品编号：_____
购买日期：_____
保修期限：自购买之日起，我公司提供____天保修服务。

以下情况恕不提供免费保修：
· 未经允许擅自拆卸修理的产品。
· 产品条码、易碎贴破损及保修卡涂改、残缺的。
· 未按照说明书的要求操作设备所引起的故障。
· 因进水或跌落而造成的故障、划伤或破损的人为损坏。
· 因不可抗拒因素造成的故障或损坏。
· 保修期限外。

联系方式：
· 公司地址：_____
· 联系电话：_____

产品合格证

产品合格证
检验合格

银联认证
Certified by UnionPay

制造商：上海商米科技集团股份有限公司
地　址：上海市杨浦区淞沪路388号创智天地7号楼505室

M00054306

封底

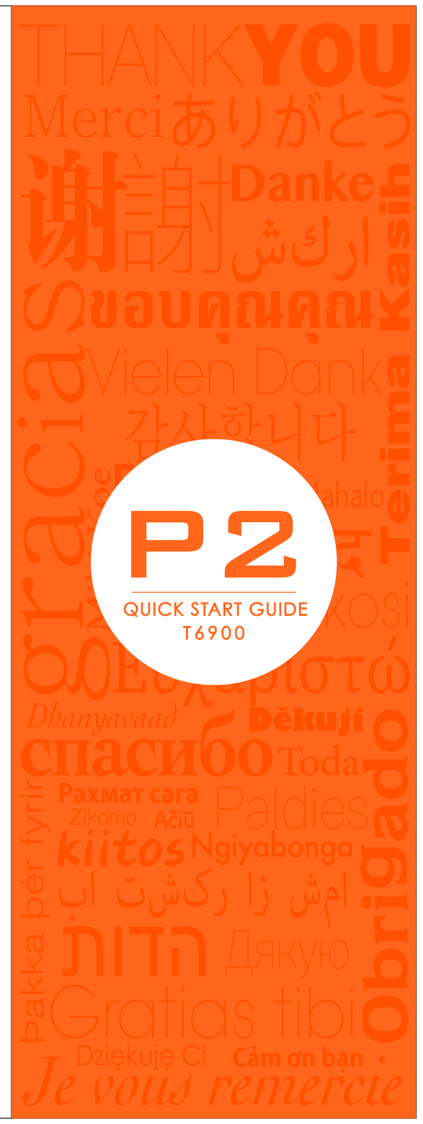

封面

Quick start

❶ NFC reader
Used for sensing Quick Pass Card.

❷ Magnetic card reader
Used for reading the information stored in the magnetic stripe of bank card.

❸ Front-facing camera (optional)
Supports photographing and 1D/2D code quick scanning.

❹ Type-C USB
Used for charging equipment and debugging by developers.
Do not charge the battery in hazardous location.

❺ Function Key
Used for customized function.

❻ Power button
Short press: wake up the screen, lock the screen.
Long press: long press for 2-3 seconds in power off mode to switch on the device.
Long press for 2-3 seconds in normal operation mode to select power off or reboot.
Long press for 11 seconds when system is frozen for automatic reboot.

❼ Printer
For printing sales slips in power on mode.

❽ Indicator lamp
Used for indicating the steps for swiping card.

❾ IC Card socket
Used for inserting the bank chip card.

❿ Two dimensional code scanner(optional)
Used to read commodity code and mobile payment code.
Attention: do not look directly into the eyes.

⓫ Rear camera
Supports photographing and 1D/2D code quick scanning.

⓬ Extend pins
To connect to dock.(Need to buy dock separately)
Do not use dock in hazardous location.

⓭ Slide down the metal buckle and take out the Nano SIM

⓮ SIM card slot (PSAM optional)
Used for inserting the SIM Card(PSAM optional)
Do not open and insert SIM card when an explosive atmosphere is present.

⓯ PSAM card slot
Used for inserting the PSAM Card.
Do not open and insert PSAM card when an explosive atmosphere is present

⓰ Micro SD card slot
Used for inserting extend SD card.

⓱ Nano SIM card slot
Used for inserting Nano SIM card.

Printing instructions

This device supports 58mm thermal paper with the specifications of 57±0.5mm*Ø40mm.
① Please open the paper container with the uncovering handl , Please do not force open the paper container to avoid print head gear wear;
② Feed the paper correctly into the paper container in the direction as shown, and pull some paper outside the cutter;
③ Close the cover of the paper container to finish printing paper feeding .
Note: If the printed paper is blank, please check whether the paper roll has been installed in the correct direction.
Do not open paper container when an explosive atmosphere is present.

Notices

Safety Warning
. WARNING - DO NOT CHARGE THE BATTERY IN HAZARDOUS LOCATION, including cable and cradle.
. WARNING - DO NOT OPEN WHEN AN EXPLOSIVE ATMOSPHERE IS PRESENT, including inserting SIM card, changing paper roll.
. This device is anti-explosion product with Ex ic IIA T3 level. Please use it in the according environment.
. Connect the AC plug to the AC socket corresponding to the marked input of the power adapter;
. This is a Class A product. This product may cause radio interference in living environments. In that case, the user may be required to take adequate measures against interference.
. Battery is un-removable. Please don't change the battery by yourself.

Significant Safety Instructions
Do not install or use the device during lightning storms to avoid the potential risks of lightning shock;
Please turn off the power immediately if you notice abnormal odor, heat or smoke;
The paper cutter is sharp, please do not touch!

Suggestions
Do not use the terminal near water or moisture to prevent liquid from falling into the terminal;
Do not use the terminal in extremely cold or hot environments, such as near flames or lit cigarettes;
Do not drop, throw or bend the device;
Use the terminal in a clean and dust-free environment if possible to prevent small items from falling into the terminal;
Please do not use the terminal near medical equipment without permission.

Statements
The Company does not assume responsibilities for the following actions:
Damages caused by use and maintenance without complying with the conditions specified in this guide;
The Company will not assume any responsibilities for the damages or problemscaused by optional items or consumables (rather than the initial products or approvedproducts of the Company). The customer is not entitled to change or modify the product without our consent. The product's operating system supports official systemupdates, but if you change the operating system into a third party ROM system or alter the system files by system cracking, it may cause system instability and security risks and threats.

Disclaimer
As a result of product upgrading, some details in this document may not match the product, and the actual product shall govern. The Company reserves the right of interpretation of this document. The Company also reserves the right toalter this specification without prior notice.

Modo di protezione：Ⅱ 3G Ex ic IIB T4 Gc

RF Exposure Statement (SAR)

This device has been tested and meets EU, FCC and IC RSS-102 applicable limits for radio frequency (RF) exposure.
Please visit: www.sunmi.com.

EU regulatory conformance

Conformity CE
Hereby, Shanghai Sunmi Technology Co., Ltd. declares that this device is in compliance with the essential requirements and other relevant provisions of Radio Equipment Directive 2014/53/EU.The full text of the EU declaration of conformity is available at the following internet address: https://developer.sunmi.com/docs/read/en-US/maaeghjk480

INFORMATION ABOUT THE SOFTWARE
The description of accessories and components, including software, which allow the radio equipment to operate as intended, can be obtained in the full text of the EU declaration of conformity at the following internet address:
https://developer.sunmi.com/docs/read/en-US/maaeghjk480.

RESTRICTIONS OF USE
5150-5350MHz only be used by indoor.

Technical specifications

CE certification information (SAR)
This device was tested for typical body-worn operations with the back of the handset kept 5mm away. To maintain compliance with RF exposure requirements, use accessories that maintain a 5mm separation distance between the user's body and the back of the handset. The use of belt clips, holsters and similar accessories should not contain metallic components in its assembly. The use of accessories that do not satisfy these requirements may not comply with RF exposure requirements, and should be avoided.
If you are using pacemaker, hearing aid, cochlear implant or other device, please use the phone according to the doctor's advice.

PRODUCT SAFETY WARNINGS
Use responsibly. Read all instructions and safety information before use to avoid injury.The limit operating ambient temperature of the equipment declared by the manufacturer is -15~55°C

Battery safety
Charge battery only at ambient temperatures ranging from 40°C.
(1) CAUTION: Danger of explosion if battery is incorrectly replaced. Replace only with the same or equivalent type of battery recommended by the manufacturer. Dispose of used batteries according to battery manufacturer's instructions.
(2) CAUTION: Risk of explosion if battery is replaced by an incorrect type . Dispose of used batteries according to the instructions.
(3) CAUTION:Battery charging temperature upper limit is 40°C.

Adapter safety
When charging, please place the device in an environment that has a normal room temperature and good ventilation. It is recommended to charge the device in an environment with a temperature that ranges from 0°C~40°C.
For altitude 2km below use only

Wi-Fi Safety
Turn Wi-Fi off in areas where Wi-Fi use is prohibited or when it may cause interference or danger, such as in airplanes while flying.

Technical features and characteristic

	Operation Frequency	Transmitted
GSM 900	880.0~915.0MHz(TX), 925.0~960.0MHz(RX)	32.5dBm
GSM 1800	1710.0~1785.0MHz (TX), 1805.0~1880.0 MHz (RX)	29.5dBm
WCDMA Band I	1920~1980MHz (TX), 2110~2170MHz (RX)	21dBm
WCDMA Band VIII	880~915MHz (TX), 925~960MHz (RX)	22.5dBm
LTE BAND 1	1920~1980MHz (TX), 2110~2170MHz (RX)	22.5dBm
LTE BAND 3	1710~1785 MHz (TX), 1805~1880MHz (RX)	23dBm
LTE BAND 7	2500~2570MHz(TX), 2620~2690MHz(RX)	23dBm
LTE BAND 8	880~915MHz(TX) , 925~960MHz(RX)	23dBm
LTE BAND 20	832~862MHz(TX),791~821MHz(RX)	22.5dBm
LTE BAND 38	2570~2620MHz (TX/RX)	21.5dBm
LTE BAND 40	2300~2400MHz (TX/RX)	22dBm
BT/BLE	2402MHz~2480MHz	7dBm
2.4G Wi-Fi	2412MHz~2472MHz	15dBm
5G Wi-Fi	5.15~5.35GHz	16.5dBm
5G Wi-Fi	5.725~5.850GHz	13.5dBm

ISED Canada compliance statements

This device complies with ISED Canada licence-exempt RSS standard(s). Operation is subject to the following two conditions: (1) this device may not cause interference, and (2) this device must accept any interference, including interference that may cause undesired operation of the device.
Le présent appareil est conforme aux CNR d'ISDE Canada applicables aux appareils radio exempts de licence. L'exploitation est autorisée aux deux conditions suivantes:(1) L'appareil ne doit pas produire de brouillage, et (2) L'appareil doit accepter tout brouillage radioélectrique subi, même si le brouillage est susceptible d'en compromettre le fonctionnement.
the device for operation in the band 5150-5250 MHz is only for indoor use to reduce the potential for harmful interference to co-channel mobile satellite systems;
Les dispositifs fonctionnant dans la bande 5150-5250 MHz sont réservés uniquement pour une utilisation à l'intérieur afin de réduire les risques de brouillage préjudiciable aux systèmes de satellites mobiles utilisant les mêmes canaux.

Manufacture
Shanghai Sunmi Technology Co., Ltd.
Room 505, KIC Plaza, No.388 Song Hu Road, Yang Pu District, Shanghai, China

FCC compliance statement

This device complies with Part 15 of the FCC Rules. Operation is subject to the following two conditions: (1) this device may not cause harmful interference, and (2) this device must accept any interference received, including interference that may cause undesired operation.

Note: This equipment has been tested and found to comply with the limits for a Class B digital device, pursuant to part 15 of the FCC Rules. These limits are designed to provide reasonable protection against harmful interference in a residential installation.This equipment generates, uses and can radiate radio frequency energy and, if not installed and used in accordance with the instructions, may cause harmful interference to radio communications. However, there is no guarantee that interference will not occur in a particular installation. If this equipment does cause harmful interference to radio or television reception, which can be determined by turning the equipment off and on, the user is encouraged to try to correct the interference by one or more of the following measures:
—Reorient or relocate the receiving antenna.
—Increase the separation between the equipment and receiver.
—Connect the equipment into an outlet on a circuit different from that to which the receiver is connected.
—Consult the dealer or an experienced radio/TV technician for help.

Caution: The user is cautioned that changes or modifications not expressly approved by the
party responsible for compliance could void the user's authority to operate the equipment.

Declaration of Conformity

	AT	BE	BG	CY	CZ	DE	DK	EE	ES	FI	FR
	GR	HU	IE	IT	LT	LU	LV	MT	NL	PL	PT
	RO	SE	SI	SK	UK (NI)						

EU Representative :SUNMI France SAS
186,avenue Thiers,69006 Lyon,France

This symbol means that it is forbidden to dispose the product of with normal household waste. At the end of the product life cycle, waste equipment should be taken to designated collection points, returned to the distributor when purchasing a new product, or contact your local authority representative for detailed information on WEEE recycling.

Inicio rápido

❶ Lector NFC
Se utiliza para detectar tarjetas Quick Pass.

❷ Lector de tarjetas magnéticas
Se utiliza para leer la información almacenada en la banda magnética de tarjetas bancarias.

❸ Cámara frontal (opcional)
Para fotografiar y escanear códigos 1D/2D de forma rápida.

❹ USB Tipo C
Se utiliza para cargar equipos y para la depuración por parte de desarrolladores. No cargue la batería en lugares peligrosos.

❺ Teclas de Función
Se utiliza para la función personalizada.

❻ Botón de encendido
Pulsación corta: activa la pantalla, bloquea la pantalla.
Pulsación larga: cuando el dispositivo está apagado, presione durante 2-3 segundos para encenderlo.
En funcionamiento normal, presione durante 2-3 segundos y seleccione apagar o reiniciar.
Mantenga presionado durante 11 segundos cuando el sistema esté bloqueado para realizar un reinicio automático.

❼ Impresora
Para imprimir comprobantes de venta en modo encendido.

❽ Indicador luminoso
Se utiliza para indicar los pasos para pasar la tarjeta.

❾ Receptor de Tarjetas IC
Se utiliza para insertar tarjetas bancarias con chip.

❿ Escáner bidimensional de códigos (opcional)
Se utiliza para leer códigos de productos y códigos de pagos móviles.
Atención: no lo mire directamente con los ojos.

⓫ Cámara trasera
Para fotografiar y escanear códigos 1D/2D de forma rápida.

⓬ Pines de extensión
Para conectar a la base (es necesario comprar la base por separado)
No utilice la base en lugares peligrosos.

⓭ Deslice hacia abajo la hebilla de metal y retire la Nano SIM

⓮ Ranura para tarjeta SIM (PSAM opcional)
Se utiliza para insertar la tarjeta SIM (PSAM opcional)
No abra ni inserte la tarjeta SIM si hay una atmósfera explosiva.

⓯ Ranura para tarjetas PSAM
Se utiliza para insertar tarjetas PSAM.
No abra ni inserte la tarjeta PSAM si hay una atmósfera explosiva.

⓰ Ranura para tarjeta Micro SD
Se utiliza para insertar la tarjeta SD extensible.

⓱ Ranura para tarjeta Nano SIM
Se utiliza para insertar la tarjeta Nano SIM.

Instrucciones de impresión

Este dispositivo admite papel térmico de 58 mm con las especificaciones de 57± 0.5 mm x Ø40 mm.
① Abra el contenedor de papel con el asa de apertura. No fuerce la apertura del contenedor de papel para evitar el desgaste del engranaje del cabezal de impresión.
② Cargue el papel correctamente en el contenedor de papel en la dirección indicada y saque un poco de papel fuera del cortador.
③ Cierre la tapa del contenedor de papel para finalizar la carga del papel de impresión.
Nota: Si la impresora está en blanco, compruebe si el rollo de papel se ha instalado en la dirección correcta.
No abra el contenedor de papel si hay una atmósfera explosiva.

Avisos

Advertencia de Seguridad
. ADVERTENCIA: NO CARGUE LA BATERÍA EN UN LUGAR PELIGROSO, incluidos el cable y el soporte.
. ADVERTENCIA: NO ABRIR SI HAY UNA ATMÓSFERA EXPLOSIVA, incluida la inserción de la tarjeta SIM, el cambio del rollo de papel.
. Este dispositivo es un producto con protección antiexplosión con nivel Ex ic IIA T3. Utilícelo en el entorno correspondiente.
. Conecte el enchufe de CA al conector CA que corresponde a la entrada marcada del adaptador de corriente;
. Este es un producto Clase A. Este producto puede causar interferencias de radio en entornos habitables. En ese caso, es posible que el usuario deba tomar las medidas adecuadas contra las interferencias.
. La batería no es extraíble. No cambie la batería usted mismo.

Instrucciones de Seguridad Importantes
No instale ni utilice el dispositivo durante tormentas eléctricas para evitar posibles riesgos de descargas eléctricas;
Por favor, desconecte la energía inmediatamente si nota olor, calor o humo anormal;
El cortador de papel está afilado, ¡no lo toque!

Sugerencias
No utilice la terminal cerca de agua o humedad para evitar que le caiga líquido adentro;
No utilice la terminal en ambientes extremadamente fríos o calientes, como cerca de llamas o cigarrillos encendidos;
No deje caer, arroje o doble el dispositivo;
Utilice la terminal en un entorno limpio y libre de polvo, si es posible, para evitar que le caigan objetos pequeños adentro;
Por favor, no utilice la terminal cerca de equipos médicos sin tener permiso.

Declaraciones
La Compañía no asume responsabilidades por las siguientes acciones:
Daños causados por uso y mantenimiento sin cumplir con las condiciones especificadas en esta guía;
La Compañía no asumirá ninguna responsabilidad por los daños o problemas causados por artículos opcionales o de consumo (en lugar de los productos iniciales o productos aprobados por la Compañía). El cliente no tiene derecho a cambiar o modificar el producto sin nuestro consentimiento.
El sistema operativo del producto es compatible con las actualizaciones oficiales del sistema, pero si se cambia el sistema operativo a un sistema ROM de terceros o se alteran los archivos del sistema mediante acceso forzando el sistema, puede causar inestabilidad en el sistema al igual que riesgos y amenazas de seguridad.

Descargo de responsabilidad
Como resultado de la actualización del producto, es posible que algunos detalles de este documento no coincidan con el producto y el producto real será la guía. La Compañía se reserva el derecho de interpretación de este documento. La Compañía también se reserva el derecho de modificar esta especificación sin previo aviso.

Modo di protezione：Ⅱ 3G Ex ic IIB T4 Gc

P2MOON _品牌多语言版_说明书_manual _20231117_V1.8

技术要求:

1、材质：105g哑粉纸

2、工艺:黑色印刷+2专色+包心折 ■ PANTONE 165C PANTONE Orange 021C

3、尺寸公差:220x80mm

4、商米料号：M05054306