Trademark Information

EVO 2™, **Autel Explorer™**, **Starpoint™** and the **Autel Robotics®** logo are trademarks of Autel Robotics Co., Ltd., registered in China, the United States and other countries. All other products and company names mentioned in this User Manual are registered trademarks of their respective holders.

Copyright Warning

Reproduction or retransmission of any part of this manual in any form or by any means, whether electronic, mechanical, photocopying, recording, or otherwise, is forbidden without the express written permission of Autel Robotics.

Disclaimer

Please closely follow the steps in these instructions in order to ensure safe and successful operation of your **EVO 2** aircraft.

Children must remain under adult supervision when using the aircraft. Keep the aircraft out of the reach of children when it is not in use.

If the customer fails to follow safety instructions, Autel Robotics is not liable for and provides no warranty coverage for any product damages that occur during use, be they direct or indirect, legal, special, incidental, or economic (including but not limited to loss of profits). Do not use unapproved components or attempt to modify the aircraft in any way inconsistent with the instructions in the official aircraft documentation.

These safety instructions will show you how to get started safely with your **EVO 2**. Only you can ensure that you fly your **EVO 2** securely and never jeopardize the safety of yourself, other people, or their property.

These safety instructions will be updated from time to time. To check whether you have the latest version, visit www.autelrobotics.com/support/downloads/.

Data Storage and Usage

When the **Flight Log Backup** option is disabled, as it is by default, no flight or user data will be uploaded or transmitted via the **Autel Explorer™** app. When **Flight Log Backup** is enabled and the app is paired with the aircraft, flight log data (including flight telemetry) will be uploaded and maintained on Autel Robotics data servers. All telemetry and flight logs are stored on data servers located within the boundaries of the continental United States, and the data upload occurs automatically only if the Flight Log Backup option is enabled.

The Autel Robotics customer support team doesn't have access to flight log data except when explicitly granted permission by the user via the **Autel Explorer™** app. When that permission is granted, only flight logs within the selected date range can be accessed.

Information, including still and motion imagery and data from the aircraft's sensors, will be stored on the aircraft's internal drive. If your aircraft ever needs to be sent to us for service, the information on the internal storage unit may be used to diagnose problems with the aircraft. The information will not be retained except as required to perform the service or repair. Do not remove or alter the data on the internal storage device in any way. Doing so will invalidate all warranty coverage.

Autel Robotics' purpose in gathering data is to provide support and service for our customers, and to improve the performance of our products. We take your privacy as seriously as we do our own. We will consent to the disclosure of uploaded data only when required by law to do so.

Safety Instructions

Battery Safety

The **EVO 2** is powered by a lithium-polymer battery. The misuse of Li-Po/Li-Ion batteries can be hazardous. As such, make sure to strictly follow all the battery usage, charging and storage instructions below.

⚠ **WARNING!**

- Only use batteries and charging devices that came with the aircraft or are sold by Autel Robotics for use with the **EVO 2**. Do not tamper with the battery pack or its charger.
- Battery electrolytes are highly corrosive. If any electrolyte comes in contact with your skin or your eyes, immediately flush the affected area with clean running water and seek medical attention.

Battery Usage

Always turn off the aircraft before installing or removing the battery. Additional information:

- Only use batteries and charging devices that came with the aircraft or are sold or authorized by Autel Robotics for use with the **EVO 2**. Using unapproved batteries or charging devices may result in fire, explosion, leakage, or other hazards. Autel Robotics will not be liable for any consequences resulting from the use of third-party batteries or charging devices.
- Do not disassemble, open, crush, bend, deform, puncture, shred, or otherwise intentionally cause damage to the battery. Doing so may result in fire,

explosion, leakage, or other hazards.

- If the battery starts to swell, smoke, leak, or show any signs of damage, stop using or charging it immediately and submerge it in a container of salt water.
- Do not expose the battery to temperatures below -10°C (14°F) or above 40°C (104°F). Exposing the battery to extreme temperatures will reduce its lifespan and may result in fire, explosion, or other permanent damage.
- Temperatures below 5°C (41°F) will cause the battery to discharge faster.
- Do not use the battery in strong electrostatic or electromagnetic environments.
- Do not expose the battery to fire, explosions, or other hazards.
- If the aircraft becomes submerged, remove the battery immediately after you retrieve it. Leave the battery in an open area, away from flammable objects, and maintain a safe distance until it is completely dry. Don't use the battery again. Contact our customer support team for a replacement.

Battery Charging

It should take a maximum of 90 minutes to fully charge the aircraft battery, though charging times will vary according to the remaining power level.

Additional information:

- Do not use a damaged battery charger.
- When the charger is not in use, disconnect it from the aircraft battery and the power source.
- Wait until the battery has cooled down to room temperature before charging it. If you connect the battery to the charger immediately after flight, overheat protection will prevent charging.

Battery Storage

In storage as in flight, it's important not to allow the battery to come in close contact with moisture or heat sources. Store the battery in a dry and well ventilated area at room temperature — ideally 22°C to 28°C (72°F to 82°F).

Additional information:

- Keep the battery out of reach of children and pets.
- Do not store the battery in direct sunlight or near sharp items, moisture, metal, or reactive chemicals.
- Storing the battery at extreme temperatures will reduce its lifespan. If the battery is left unused for over 7 days, store it at a temperature below 30°C (86°F). Otherwise, battery damage or failure may result.
- Over time, some reduction in battery life is expected.

Battery Disposal

- Completely discharge the battery before disposal.
- Dispose of the battery properly at an approved battery recycling location.

Flying the Aircraft Safely & Securely

Flight Environment

- Comply with all local regulations on flying drones. Only fly within designated drone flying areas, and set compliant distance and height limits using the **Autel Explorer**™ app.
- Do not fly in hazardous situations or severe weather conditions, such as tornadoes, rain, hail, or snow.
- Do not fly the aircraft near facilities that could produce electromagnetic interference, such as power plants, transmission lines, substations, and broadcasting towers.
- Fly in an open and safe area. Avoid obstacles that can interfere with the GPS signal, such as buildings and trees.
- Exercise caution when flying in environments over 6000 meters (18,000 feet) above sea level, as the aircraft's battery and power system performance may be affected.

Before Flying

Before flying the aircraft, always ensure that:

- The remote control, the battery, and the mobile device used with the **Autel Explorer**™ app are fully charged.
- The propellers are correctly installed and not damaged.
- The aircraft's front and back arms are fully unfolded.
- The aircraft's motor, gimbal, and camera work properly when the aircraft is powered on.
- All warnings and error messages displayed on the app have been addressed.

Only use accessories that came with the aircraft or are sold or authorized by Autel Robotics for use with the aircraft. Using unapproved accessories presents serious risks to safety and will void the product’s warranty.

While Flying

- During takeoff and landing, keep the aircraft away from people, vehicles, and other moving objects.
- Keep the aircraft in your visual line of sight at all times.

- Do not fly the aircraft close to water surfaces.
- When the low battery warning appears, do not cancel the automatic go-home process. Otherwise, the aircraft may not have enough battery power to return to the home point.
- In high or low temperatures or windy environments, the aircraft will consume power faster.
- If a warning appears on the **Autel Explorer**™ app, follow the corresponding instructions immediately.
- Do not fly the aircraft if you are dizzy, fatigued, under the influence of alcohol or drugs, or experiencing any other condition that may impair your ability to safely operate the aircraft.

⚠ **WARNING**

If any part of the aircraft or the remote control fails to function correctly or has visible damage, do not fly the aircraft. Contact our support team at www.autelrobotics.com/contact-us/.

Storage & Maintenance

Carefully check every part of the aircraft after any crash or collision. Keep the aircraft and its accessories stored out of the reach of children and pets.

- Store the aircraft and its accessories in a cool, dry place.
- Keep the aircraft away from moisture and heat sources.
- The recommended storage temperature for the aircraft is 22°C to 28°C (72°F to 82°F).

The Autel Robotics support team stands ready to help via chat, phone or email at www.autelrobotics.com/contact-us/.

Contents

Chapter 1 About This Manual 1

1.1 Legend 1

1.2 Before First Flight 1

1.2.1 Reading the Included Documents 1

1.2.2 Autel Explorer™ App Installation (Optional) 2

Chapter 2 Getting to Know Your Smart Drone 3

2.1 Aircraft 3

2.1.1 Functionality Description 3

2.1.2 Flight LED Indicators 5

2.1.3 Aircraft Battery 6

2.1.4 Gimbal & Camera 9

2.1.5 Built-in Smart Flight System 11

2.1.6 Smart Flight Features 12

2.2 Remote Control 16

2.2.1 Functionality Description 16

2.2.2 Live View Panel 18

2.2.3 Indicator Lights 22

2.2.4 Remote Control Buzzer Alerts 23

Chapter 3 Preflight Preparation 24

3.1 Battery Preparation 24

3.1.1 Aircraft Battery Installation 24

3.1.2 Aircraft Battery Removal 24

3.1.3 Charging 24

3.2 Remote Control Preparation 26

3.2.1 Unfolding the Remote Control 26

3.2.2 Powering Up/Off the Remote Control 27

3.2.3 Remote Control Calibration 27

3.2.4 Pairing the Aircraft & Remote Control 28

3.3 Aircraft Preparation 29
3.3.1 Unfolding the Aircraft 29
3.3.2 Propellers Installation 30
3.3.3 Compass Calibration 31
Chapter 4 Flight Operations 33
4.1 Preflight Checklist 33
4.2 Remote Control & Flight Operations 33
4.2.1 Motor Start & Aircraft Takeoff 34
4.2.2 Command Stick Controls (Mode 2) 34
4.2.3 Landing & Motor Shutdown 36
Chapter 5 Maintenance & Service 39
5.1 Firmware Upgrade 39
5.2 Troubleshooting Tips 40
5.3 Storage & Maintenance 41
5.4 Warranty 41
5.5 Customer Service 42
5.5.1 Technical Support 42
5.5.2 Repair Service 42
Chapter 6 Appendix 44
6.1 Regulatory Compliance & Flight Restricted Area 44
6.1.1 Compliance & Advisory 44
6.1.2 Flight Restricted Area Illustration 45
6.2 Specifications 47

Chapter 1

About This Manual

Thank you for purchasing the **EVO 2**, and welcome to the Autel Robotics family. Use this manual to get a detailed look at the **EVO 2**'s features and how best to make use of them when operating the aircraft and remote control. Please read it in its entirety — with the other included documentation — before flying your **EVO 2** for the first time, and keep it at hand for easy consultation while you get to know your aircraft.

1.1 Legend

Pay special attention to the callouts appear throughout this manual.

- **WARNING:** Points out a potentially hazardous situation.
- **IMPORTANT**: Something to be aware of during flight operation.
- **NOTE**: Supplementary information.
- **TIPS**: How to get the most out of your **EVO 2** experience.
- **REFERENCE:** A page number that guides you to the section containing relevant information in this manual.

1.2 Before Your First Flight

1.2.1 Documents for Getting Started

The following documents will help you get started using your **EVO 2** for the first time.

1. **EVO 2 Packing List:** A list of all the items that should be in the product box. If any items are missing, please contact Autel Robotics customer support or your local retailer.
2. **EVO 2 Disclaimer & Safety Instructions:** Notes on how to operate the **EVO 2** safely and responsibly
3. **EVO 2 Quick Guide:** The basics of **EVO 2** operation
4. **EVO 2 User Manual:** A guide to the finer points of **EVO 2** mastery. Download it at https://www.autelrobotics.com/support/downloads/.

5. **Autel Explorer™ App Manual:** If you plan to use our mobile app, download the manual for it at www.autelrobotics.com/support/downloads/.

⚠ **WARNING**

Make sure the aircraft and other components on the **Packing List** are accounted for in the box. Do not use unapproved components or attempt to modify the aircraft in any way inconsistent with the instructions in the official aircraft documentation.

1.2.2 Autel Explorer™ App Installation (Optional)

The **Autel Explorer™** app delivers a live stream, and enhanced flight and camera controls to your mobile device.

Search for **Autel Explorer** in the App Store or Google Play, then tap **INSTALL**.

Available on the App Store

Get it on Google play

Chapter 2

Getting to Know Your Smart Drone

Now you can explore, discover and create like never before. The **EVO 2** delivers not only advanced features like obstacle avoidance and intelligent flight modes, but also high-tech muscle that brings home a top speed of 44 mph, a 35-minute flight time and an operating distance of 16 miles.

In-flight performance, however, is just the start. The **EVO 2**'s stabilized 3-axis camera allows you to shoot at up to 8K/25 fps, and view the live feed at up to 1080p on your mobile device or the remote control's built-in OLED screen.

2.1 Aircraft

The **EVO 2** is a foldable quadcopter with a stabilized 3-axis camera gimbal and 4 different types of integrated HD camera.

2.1.1 Functionality Description

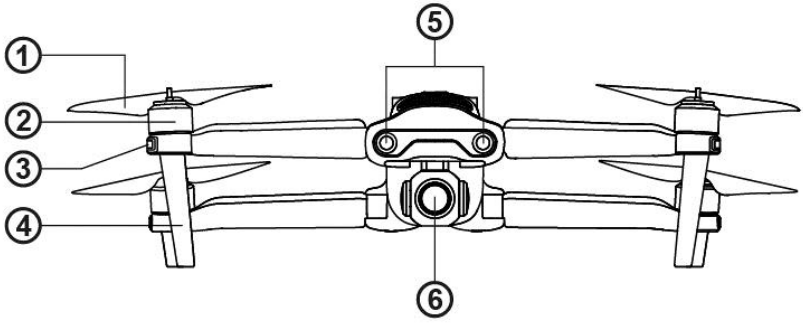

Front Side

① Propellers
② Motors
④ Landing Gear
⑤ Forward Vision System

③ Front LED Indicators ⑥ Camera Gimbal

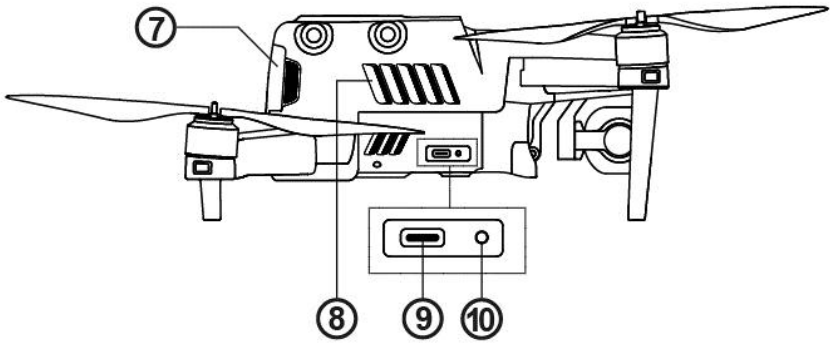

Right Side

⑦ Aircraft Battery ⑨ USB Port

⑧ Fan Exhaust

⑩ Remote Control Pairing Button/Pairing Indicator

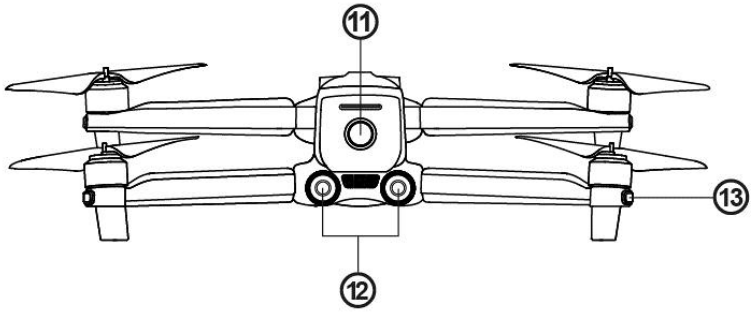

Rear Side

⑪ Power Button ⑬ Rear LED Indicators

⑫ Rear Vision System

NOTE

There is a protector on the back designed to protect the **Micro-USB Port** and **Remote Control Pairing Button/Pairing Indicator**. Remember to put it back in place before flying the aircraft.

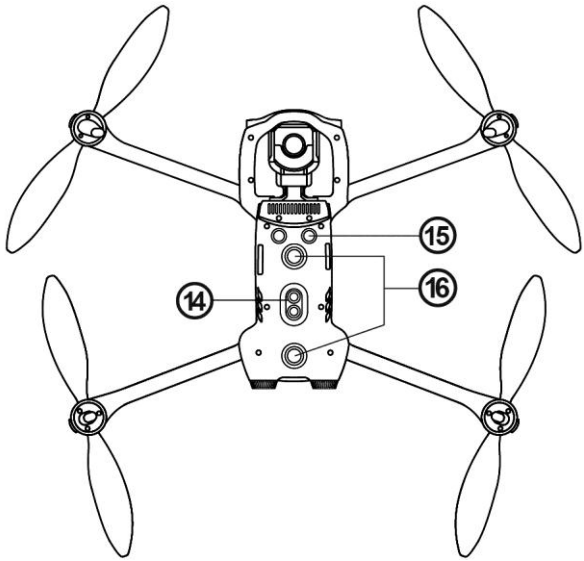

Bottom Side

⑭ Downward Vision Lighting LED

⑮ Ultrasonic Sensor

⑯ Downward Vision System

2.1.2 Flight LED Indicators

An LED indicator is located on the end of each aircraft arm. The front LEDs will light up solid red to help you identify the direction of the aircraft's nose. The rear LEDs will display the current flight status of the aircraft. The chart below shows the meaning of each status indicator.

Indicator Key:

Slow Flashing: Flashes once every 2s
Fast Flashing: Flashes twice per second
Double Flashing: Flashes twice and then pauses and repeats
Alternate Flashing: Alternates among different colors

Color Key:

R	Red
G	Green
Y	Yellow

Example: “R - Solid Light” means solid red light.

Definitions of Flight LED Indicator Status	
Normal Status	
RGY - Alternate Flashing	System self-test is activated
YG - Alternate Flashing	The aircraft is warming up
G - Slow Flashing	The aircraft is in **GPS** mode
Warning	
Y - Slow Flashing	The aircraft is in **ATTI** mode
Y - Fast Flashing	No connection between the aircraft and remote control
R - Slow Flashing	**Low Battery Warning**
R - Fast Flashing	**Critically Low Battery Warning**
R - Solid Light	Critical problems, IMU error
RY - Alternate Flashing	Abnormal compass, calibration is required / Magnetometer interference
Compass Calibration	
Y - Fast Flashing	Be ready to calibrate the compass / The aircraft is calibrating
G - Solid Light	Calibration is successful
R - Solid Light	Calibration is failed
Gesture Commands	
R - Fast Flashing	Gesture command has been received

2.1.3 Aircraft Battery

The **EVO 2**'s all-new, custom-designed rechargeable Li-Po battery features high energy density and capacity, and can provide up to 35 minutes of continuous flight with a full charge. It should be charged exclusively using the supplied charger.

- **Basic Functions**

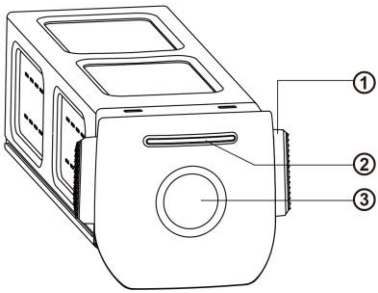

Aircraft Battery

① Removal Button

② Battery Level Indicators

③ Power Button

➢ Turning On the Battery

Make sure the battery is off before attaching it to the aircraft. After attaching it, press and hold the **Power Button** for 3 seconds. The battery level indicators will display the current battery level.

➢ Turning Off the Battery

Press and hold the **Power Button** for 3 seconds to turn off the battery. If the battery is attached to the aircraft, the LED 1 and LED 4 will flash 5 times to indicate that the battery is turning off. Once all **Battery Level Indicators** have turned off, remove the aircraft battery from the aircraft.

➢ Checking the Battery Level

To check the battery level without powering it on, press the **Power Button** for 1 second, and then release it quickly. The LEDs will display the current battery level as shown below.

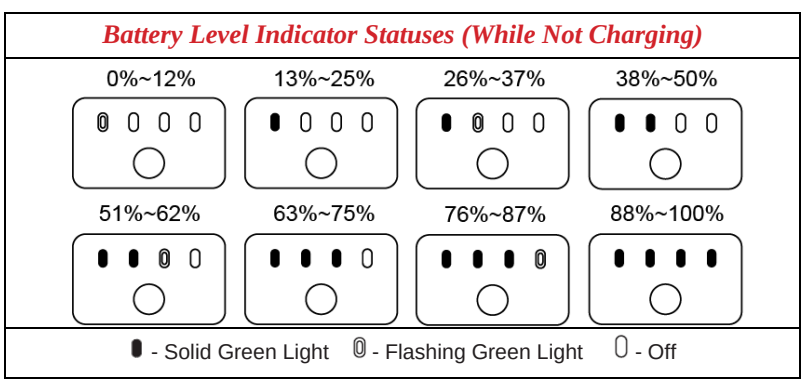

• Additional Functions

The additional functions listed below protect and preserve the battery.

- **Storage Self-Discharge Protection:** If the battery is stored in a high-temperature environment or is idle for 6 days with a high power level, self-discharge protection will be activated. The battery will discharge automatically to a safe level. This is the default setting, and the discharge process takes 2-3 days. While there's no indication that the battery is performing a self-discharge cycle, you may notice a slight warming of the battery, which is normal. The discharge threshold can be customized using the **Autel Explorer™** app.
- **Sleep Mode Protection:** If the battery power level is low, the battery will automatically enter sleep mode to prevent damage. In this mode, the battery will not respond when you push the Power Button. To wake up the battery, connect it to the charger.
- **Charging Temperature Detection:** If the charging temperature reaches below 10°C (50°F) or above 45°C (113°F), the battery will stop charging.
- **Overcurrent Protection:** If the charging current exceeds 8A, the battery will stop charging.
- **Overcharge Protection:** Charging will stop automatically when the battery is fully charged.
- **Balance Protection:** The voltage of each battery cell is balanced to prevent overcharging or over-discharging.
- **Over-Discharge Protection:** When the battery is not in use, it will automatically disconnect the power output function once the self-discharge cycle is completed. This function is disabled during flight.
- **Short Circuit Protection:** The power supply will be cut off in the event that a short circuit is detected.
- **Power Saving Mode:** After 30 minutes of inactivity, the battery will turn off.
- **Communication:** When in use, the aircraft continuously syncs with the battery to provide real-time information including voltage, capacity, current, and temperature.
- **Ultra-Low Power Consumption Mode:** To conserve power, this mode will be activated if the battery is idle for 7 days with a voltage lower than 11.6 V. The battery will resume normal function after being connected to the charger.

- **LED Warning Descriptions**

LED 1	LED 2	LED 3	LED 4	Warning Description
				Charging temperature is too high or too low.
				Charging current is too high and has caused a short circuit.
				Overcurrent, overload, or a short circuit has occurred during discharge.
- Flashing Light			- Off	

2.1.4 Gimbal & Camera

The aircraft contains a high-precision 3-axis gimbal that keeps the camera steady while the aircraft is flying, ensuring image stability and clarity. To operate properly, the gimbal temperature must be between -10°C and 50°C (14°F and 122°F). You can use the remote control's gimbal pitch dial or the **Autel Explorer**™ app to adjust the pitch axis to any angle from 0° to 90°.

Three user-changeable gimbal modules are available for use with the **EVO 2**:

- **586 gimbal:** provides an 8K video camera
- **383 gimbal:** provides a 6K camera with a 1-inch sensor
- **Dual-sensor gimbal:** provides an infrared camera and an 8K video camera

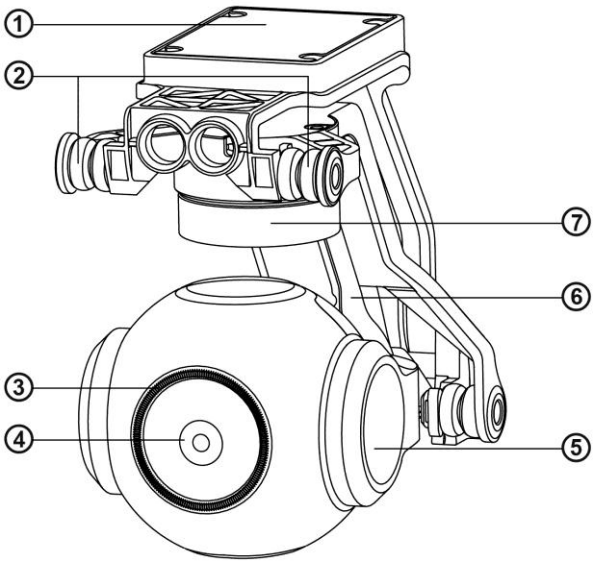

① MCU Installation Pan
② Vibration Absorber
③ Filter
④ Camera
⑤ Pitch Motor
⑥ Yaw Motor
⑦ Roll Motor

IMPORTANT

- The **EVO 2** camera gimbal is held in place with a gimbal holder to protect the gimbal from the incidental rotation — and to avoid damage when stored.
- **Remember to remove the holder before powering on the aircraft. Failure to do so may result in damage to the gimbal motors and circuitry.**
- When the aircraft is powered on, the gimbal will automatically rotate to perform self-test and calibration. Ensure that there are no objects near the gimbal that could obstruct its motion.

The gimbal has two working modes:

- **Stabilized Mode:** The roll axis stays horizontal, and the pitch axis stays at the user-specified angle. This mode is designed for capturing stable horizontal photos and videos.
- **FPV Mode:** The roll axis stays aligned with the aircraft's roll orientation, and the pitch axis stays at the user-specified angle. This mode is designed for use with first-person view.

- ## Removing the Gimbal

1. Place the aircraft on a level surface with the gimbal compartment facing upward.
2. Using a small star screwdriver, unscrew the two screws securing the gimbal's cover, and remove the gimbal cover. Then use a Phillips head screwdriver to unscrew the screws securing the FPC connector, and pull the head of the connector cable out of its slot.

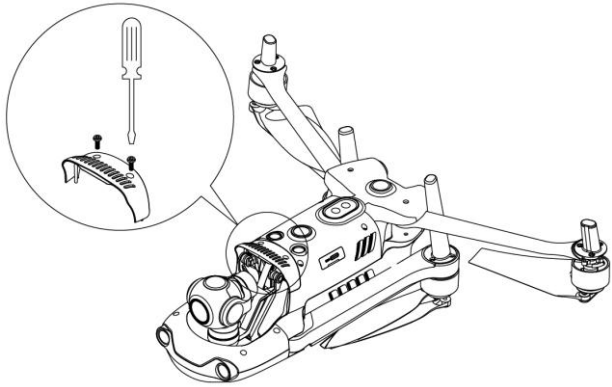

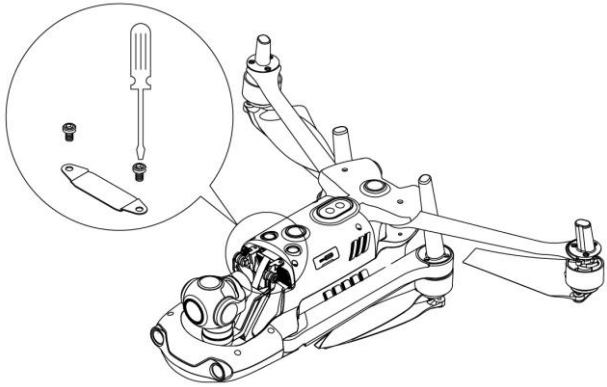

3. Gently grasp the two vibration absorber tails with your thumb and forefinger. Slide the gimbal back and up in a straight line, following the gimbal compartment groove.

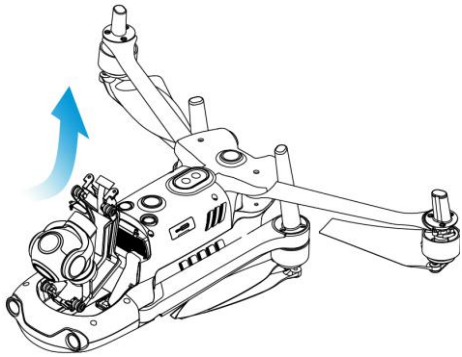

- **Replacing the Gimbal**

1. Gently grasping the two vibration absorber tails with your thumb and forefinger, pick up the gimbal. Slide the gimbal down and forward in a straight line, following the gimbal compartment groove.

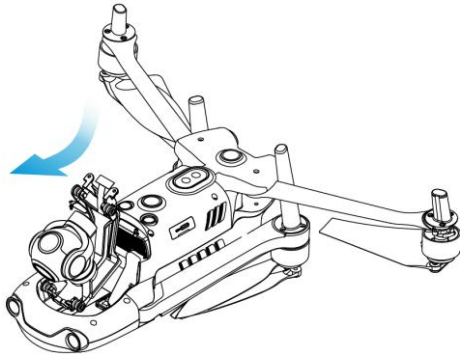

Notes: 1) Ensure that the loops at the front of the gimbal align with the two pins in the gimbal compartment at the nose end of the aircraft.

2) Ensure that the gimbal is flush with the gimbal compartment groove.

2. Insert the head of the connector cable into its slot, gently pushing it in as far as it will go.

Place the gimbal cover on top of the gimbal compartment.

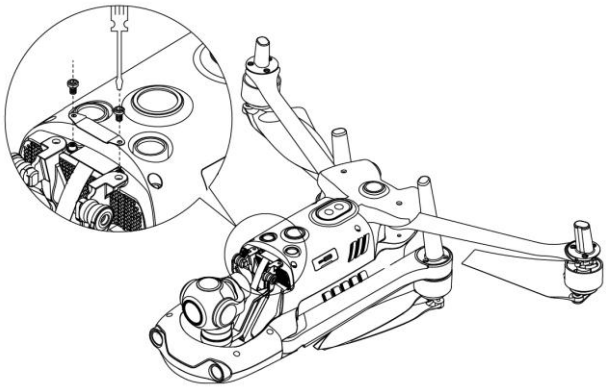

3. Insert a screw into one hole on the gimbal’s ventilation cover, and use a small star screwdriver to screw it in just until it is loosely secured. Repeat with the other screw.
   Use the screwdriver to fully tighten both screws.

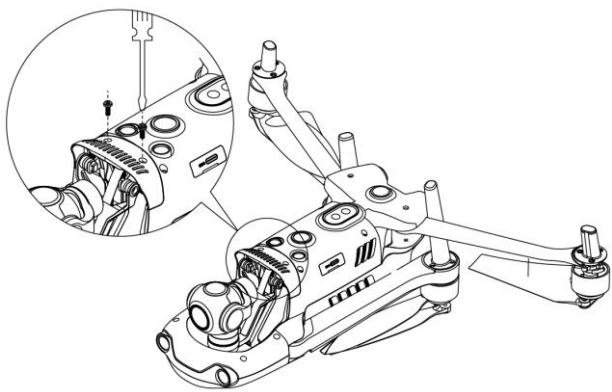

4. Power on the aircraft. If the gimbal's connector cable is properly connected, the gimbal will automatically rotate to perform self-inspection.

Note: Pick up the aircraft and turn it over so that the gimbal is facing downward. If the gimbal is properly installed, it will remain securely in its position.

• Camera

Three camera modules are available for use with the **EVO 2**:

- 8K camera: Takes photos with a resolution of up to 48 MP (8000 x 6000), and records 8K video at 25 fps, 6K video at 30 fps, or 4K video at either 30 or 60 fps, with a bit rate of up to 120 Mbps.
- Ultra-HD camera with a 1-inch sensor: Takes photos with a resolution of up to 20 MP (5472 x 3648), and records 5.5K video at 60 fps or 4K video at 120 fps, with a bit rate of up to 120 Mbps. The lens aperture is adjustable within the range of f/2.8 to f/11.

- Dual-sensor camera: Includes the 8K camera plus an infrared imaging camera. It can operate in visible, infrared, and dual-image modes. In addition, this camera takes infrared images at a resolution of either 640 x 512 or 320 x 256, and records 720p video at 30 fps in dual-image mode.

All three camera modules support a variety of shooting modes, including:

- Single shot
- Burst shooting
- Auto exposure bracketing (AEB)
- Time-lapse
- High-dynamic-range (HDR) imaging
- NIGHTBEAT (high signal-to-noise ratio)

The cameras save photos in DNG or JPG formats, and record video in MOV or MP4 formats. Images and videos can be stored in the aircraft's onboard memory or on a micro SD card. A high-definition live feed from the camera can be displayed on your remote control's screen, or at up to 1080p 30 fps on the **Autel Explorer™** app.

➢ Using a Micro SD Card

Before turning on the aircraft, insert a micro SD card into the port illustrated below.

The **EVO 2** supports SD card capacity up to 128 GB. If you plan to shoot HD video, we recommend using a Class 10 or UHS-1 micro SD card (such as the 32 GB SanDisk Extreme® or the 64 GB A2/V30/U3/Class 10 SanDisk Extreme Pro®).

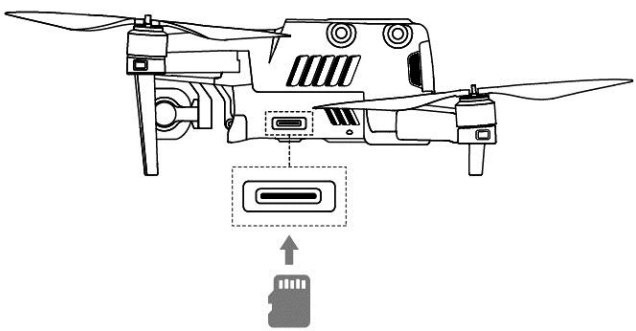

⚠ **WARNING**

To prevent file loss, always power off the aircraft before removing the micro SD card.

➢ Transferring Files to Your Computer

To transfer photos and videos to your computer, connect it to the aircraft via the **USB-C Port** as shown below.

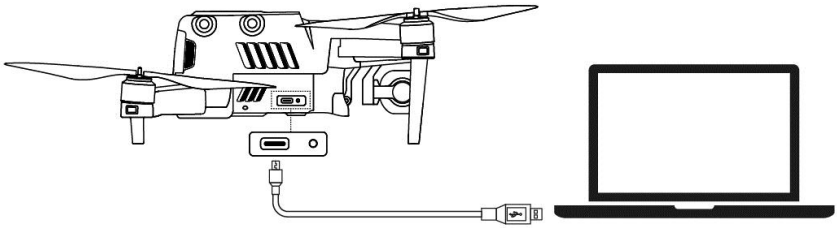

2.1.5 Built-in Smart Flight System

The **EVO 2** delivers stable and user-friendly flight control via its built-in **Smart Flight System**. The system enables a variety of advanced functions, including **Go Home**, **Failsafe**, and the **Starpoint™ Positioning System**, and operates using the modules described below.

Smart Flight System Modules	
Module	**Description**
IMU	A 3-axis gyroscope and 3-axis accelerometer measures acceleration and angular velocity. Automatic IMU calibration is performed when the aircraft is powered on.
Compass	Measures geomagnetic field and provides heading reference for the aircraft.
GNSS Receiver	Receives GNSS (GPS/GLONASS) signals to determine the latitude, longitude, and altitude.
Barometer	Measures atmospheric pressure to determine the altitude of the aircraft.
Ultrasonic Sensors	Measures the distance between the aircraft and ground.
Binocular Vision Sensing System	Enables forward, backward, left, right, upward, and downward binocular vision.

- **Flight Modes**

The **EVO 2** can automatically switch between two flight modes depending on GPS availability and flying conditions.

Flight Modes	
Flight Mode	**Description**
GPS Mode	**GPS Mode** is activated if the aircraft detects proper GNSS signals. GPS works with the **Forward** and **Downward Vision Systems** to locate and navigate obstacles, provide stable and smooth flight maneuvers, and enable safety features like **Go Home** and **Failsafe**.
ATTI Mode	**ATTI Mode** is activated when the GPS signal is weak, and lighting conditions are insufficient for the vision systems. Obstacle avoidance features are disabled, and the aircraft controls altitude through its barometer only.

2.1.6 Smart Flight Features

- ### Go Home

The **Go Home** function can be enabled only when a good GPS signal is available. To manually activate the **Go Home** process, press and hold the **Go Home Button** ( ) for 3 seconds on the remote control. Once the aircraft receives this command, it will return automatically and land at the present home point.

The **EVO 2** can detect and avoid obstacles on its flight path using its **Forward Vision System**. The remote control's function will be disabled while the aircraft returns to the home point, but you can reactivate it by pressing the **Pause Button** ( ).

WARNING

If the **Forward Vision System** is not enabled during the **Go Home** period, the aircraft will not automatically avoid obstacles. Press the **Pause Button** ( ) on the remote control to exit the **Go Home** feature and regain control of the aircraft.

IMPORTANT

- The default **Go Home** altitude is 30 meters (90 feet). If you activate **Go Home** when the aircraft is at an altitude lower than that, it will rise to 30 meters (90 feet) before returning home. Learn how to adjust the **Go Home** altitude in the **App Manual**.
- If the **Go Home** function is activated within a 10-meter (30-foot) radius of

the home point, the aircraft will automatically descend and land.

• Failsafe

The **Failsafe** function is designed to help the **EVO 2** automatically return home or land in its current position when necessary. **Failsafe** will be activated in the two situations described below.

➢ Communication Lost

Failsafe will be activated if communication is lost between your aircraft and remote control for 3 seconds.

If GPS is available when the **Failsafe** function is activated, the aircraft will automatically use the **Go Home** function. Otherwise, it will land from its current position. When communication is restored, you can still press the **Pause Button** (⏸) to regain control of the aircraft.

➢ Low Aircraft Battery Level

Failsafe will also be activated in either of the following low battery conditions.

A. The aircraft continually calculates the battery level required for the aircraft to return to the home point. If the battery level reaches the minimum level required for the aircraft to return to the home point, a notice will appear on the **Autel Explorer™** app. **Failsafe** will be activated and the **Go Home** process will be initiated. Again, you can regain control of the aircraft by pressing the **Pause Button** (⏸).

B. When the aircraft's battery level reaches the 25% threshold, you'll receive a **Low Battery Warning** and **Failsafe** will be activated, after which the aircraft will automatically return home. If you retake control of the aircraft, you'll receive a **Critically Low Battery Warning** when the battery reaches 15%, and the aircraft will automatically land in its current position. If landing in the current position may result in an emergency, you can press the **Pause Button** (⏸) to halt the landing and fly it to the nearest possible safe landing site.

NOTES

- If the aircraft is within 50 horizontal meters (150 feet) from the home point when your aircraft battery level reaches 25% (**Low Battery Warning**), the aircraft will not perform the **Go Home** procedure.
- If GPS is unavailable when **Failsafe** is activated during a **Low Battery Warning**, the aircraft will not execute the **Go Home** procedure. Instead, the aircraft will enter **ATTI** mode and stay in your control. The aircraft will proceed to land automatically only when the battery reaches 15% (**Critically Low Battery Warning**).

• Landing Features

➢ Landing Protection

When the aircraft arrives above the home point, **Landing Protection** functionality will detect the ground conditions below. The aircraft will land automatically if the ground is level and flat. If not, it will hover at the current location to wait for the next command.

➢ Accurate Landing

The aircraft will scan and match the terrain features if **Accurate Landing** function is active, it will land as close as possible to the takeoff point once the current terrain matches the takeoff point terrain.

IMPORTANT

- The aircraft records the takeoff point as the default home point. **Accurate Landing** is available only when the home point has not been refreshed during the flight.
- Choose an open and well-lit area (such as a lawn) as your takeoff point.
- When **Accurate Landing** is preparing to land the aircraft, make sure that conditions at your takeoff point haven't changed.

NOTE

Landing Protection and **Accurate Landing** can be enabled using the app. Instructions for these functions are available in the **App Manual**.

2.1.7 Omnidirectional Binocular Vision Sensing System

The **EVO 2**'s front, rear, left, right, top, and bottom binocular vision sensing systems use image data to calculate the distance between the aircraft and potential obstacles. The system will halt the aircraft's forward progress when an obstacle is detected.

The front, rear, and bottom binocular vision systems also feature the **Starpoint™ Positioning System**. This system uses ultrasonic sensors to calculate the current height of the aircraft, and uses the binocular cameras to obtain location information via image analysis.

Binocular Vision Sensing Systems		
System	**Location on Aircraft**	**Obstacle Sensing Range**
Front	Nose of the aircraft	0.5 to 20 m (1.5 ft to 60 ft)
Rear	Tail of the aircraft	0.5 to 16 m (1.5 ft to 48 ft)
Left/Right	Rear portion of the left and right side of the aircraft, respectively	0.5 to 10 m (1.5 ft to 30 ft)
Top	Top of the aircraft	0.5 to 10 m (1.5 ft to 30 ft)
Bottom	Bottom of the aircraft	0.5 to 20 m (1.5 ft to 60 ft)

The following diagrams show each binocular vision sensing system's angle of coverage:

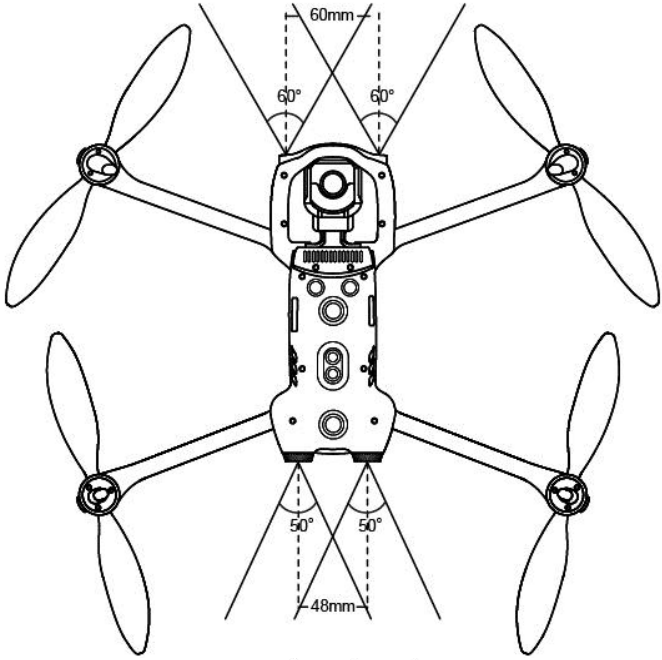
60mm
60°
60°
50°
50°
48mm

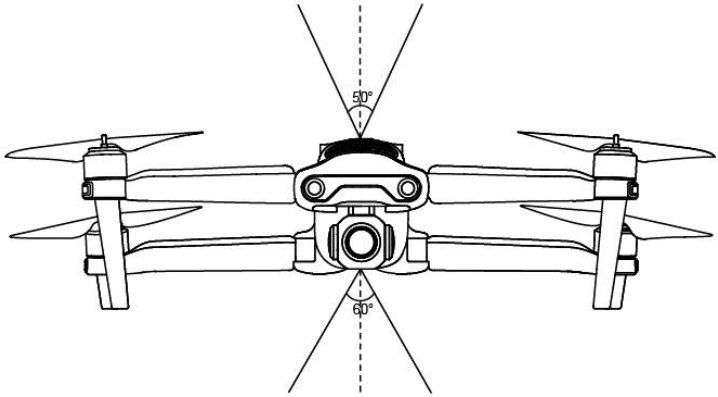
50°
60°

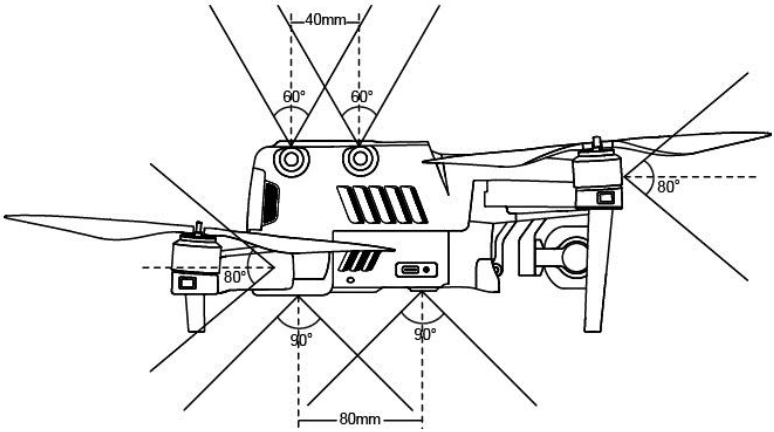

• Prerequisites

- Ensure that the aircraft is in GPS or visual positioning mode.
- Wait until the flight LED indicators are either slow flashing green or double flashing red before taking off.
- Exercise increased caution while flying if the GPS signal is weak or visual positioning requirements cannot be met — for example, when around surfaces with little visible texture or when flying at an altitude of over 12 meters (36 feet).
- The binocular vision sensing systems and **Starpoint™ Positioning System** are affected by the brightness and texture of the surfaces over which the aircraft is flying. Avoid flying over surfaces that are:
    - Monochromatic
    - Highly reflective, such as water
    - Especially dark or bright
    - Subject to frequent lighting changes
    - Made of closely repeating patterns, such as tiles
    - Sound-absorbent, such as thick carpeting
    - In motion, such as roads with heavy traffic
- Keep the binocular camera lenses and sensors clean.
- To avoid interference with the **Starpoint™ Positioning System**, do not use 40 kHz ultrasonic devices, such as ultrasonic rangefinders, fault detectors, cleaners or welding machines.

• Functionality Description

➢ Smart Tracking

Smart tracking uses deep learning algorithms to detect six types of subjects in

real time: pedestrian, cyclist, car, truck, boat, or animal. A real-time tracking algorithm is used to automatically track the selected subject while avoiding obstacles during flight. The function can track the subject in three modes: behind, side-by-side, or fixed position.

➢ Viewpoint

Viewpoint allows the user to send the aircraft to a selected destination by touching a point on the screen.

➢ Gesture Commands

The main camera uses deep learning algorithms to recognize and respond to three gesture commands: outstretch your arms to set yourself as a target, raise both arms to capture a photo, and raise one arm to start or stop recording.

➢ Accurate Landing

Accurate landing uses the aircraft's bottom binocular vision system to save a series of images indicating the aircraft's altitude and yaw during takeoff. During the go-home and landing process, the aircraft matches the aircraft's altitude and yaw to the images taken during takeoff, and calculates how far off the aircraft is from its takeoff location. The aircraft is accurately controlled based on VIO feedback, and lands in its takeoff position.

➢ Safe Landing

The safe landing function uses the aircraft's bottom binocular camera to create a density depth map. Then, it calculates the depth map's flatness and angles to detect whether a surface is flat enough to ensure safe landing.

2.2 Remote Control

The **EVO 2** has an unobstructed transmission range of up to 7 km under optimum conditions. The remote control supports live video downlink, and functions with or without a paired mobile device. The video downlink system and aircraft remote control system operate at 900 MHz or 2.4 GHz. The 3.3-inch OLED screen displays a live video feed, battery level, GPS signal, flight speed, and more.

2.2.1 Functionality Description

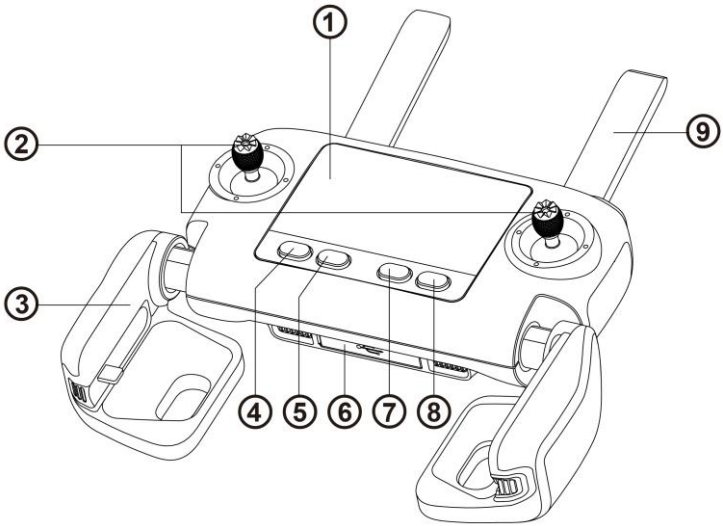

① Flight Information Panel	Displays the flight status, warning messages and live video feed
② Command Sticks	Control the orientation and movement of the aircraft
③ Mobile Device Holder	With a built-in USB connector and adjustable holder
④ Take-off/Landing Button	Commands the aircraft to take off or land
⑤ Go Home Button	Commands the aircraft to return to the home point
⑥ USB Ports	Used for charging or connecting to a mobile device
⑦ Pause Button	Tells the aircraft to pause autonomous flight operations and hover in place, or resume autonomous flight operations
⑧ Screen Navigation Button	When the mobile device is disconnected, press this button for 1 second to enter/exit the **Image Transmission** screen on the remote control
⑨ Antennas	Communicate with the aircraft at 900 MHz or 2.4 GHz

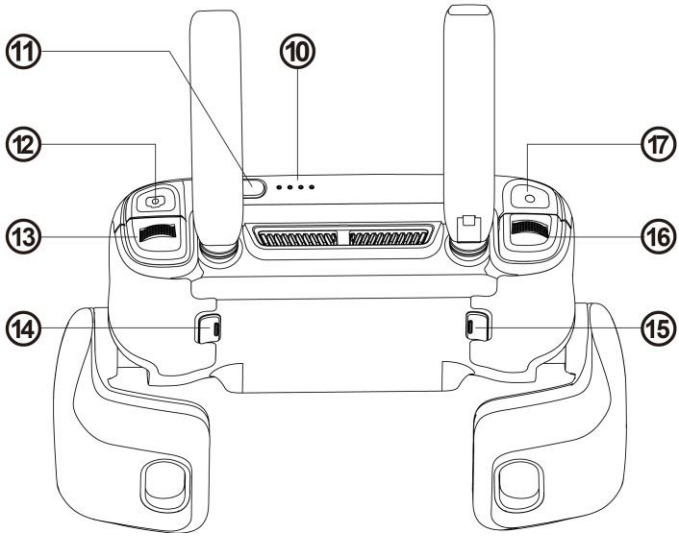

⑩ Battery Level Indicators	Indicate the remote control's remaining battery level
⑪ Power Button	Press and hold for 2 seconds to power on/off the remote control
⑫ Shutter Button	Takes photos. When **Burst Mode** is turned on, several images will be taken with one press. For details, see the **App Manual**.
⑬ Screen Navigation Dial	Scrolls through the OLED screen
⑭ Button A	Function can be set using the **Autel Explorer™** app
⑮ Button B	Function can be set using the **Autel Explorer™** app
⑯ Gimbal Pitch Dial	Controls the pitch angle of the camera gimbal
⑰ Record Button	Starts or stops recording video

2.2.2 Live View Panel

- **Flight Information Panel**

When the video link has been connected, the main interface will appear as below.

① Flight Altitude	Aircraft altitude relative to the home point
② Flight Distance	Horizontal distance between the aircraft and home point
③ Flight Speed	Current speed of the aircraft
④ Tilt Angle	The camera's angle tilted by the gimbal (0° to 90°)
⑤ Flight Status Bar	Displays real-time flight status and current flight mode
⑥ Vision System	Indicates whether the **Vision Obstacle Avoidance System** is enabled
⑦ Remote Control Battery	Displays the current battery level: • Green bars indicate normal battery (approximately 11% - 100%) • Red bars indicate low battery (approximately 10%)
⑧ Remote Control Signal	Displays the current signal strength
⑨ Remaining Flight Time	Estimates how much longer the aircraft can stay in the air based on remaining battery level
⑩ Storage Mode	Indicates whether images and videos will be stored in onboard storage or on a **Micro SD Card**
⑪ GPS Signal	Indicates the signal strength of nearby GNSS satellites
⑫ Aircraft Battery	Displays the current battery level: • Green bars indicate normal battery level • Orange bars indicate low battery level • Red bars indicate critically low battery Note: You can set the battery level threshold using the **Autel Explorer™** app.
⑬ Camera Mode	Indicates the current camera mode

• Image Transmission Mode

Press the **Screen Navigation Button** (**DISP**) on the remote control when you want to enter the **Image Transmission Mode**. Then follow these steps:

1. Scroll the **Screen Navigation Dial** to highlight the different setting options.
2. Press the **Screen Navigation Dial** to enter the highlighted option.
3. Scroll the **Screen Navigation Dial** again to set different values.
4. Press the **Screen Navigation Dial** to confirm this value, or press the **Screen Navigation Button** (**DISP**) to go back.
5. Press the **Shutter Button** to take a photo.
6. Press the **Record Button** to start or stop recording video.

➢ Image Transmission View

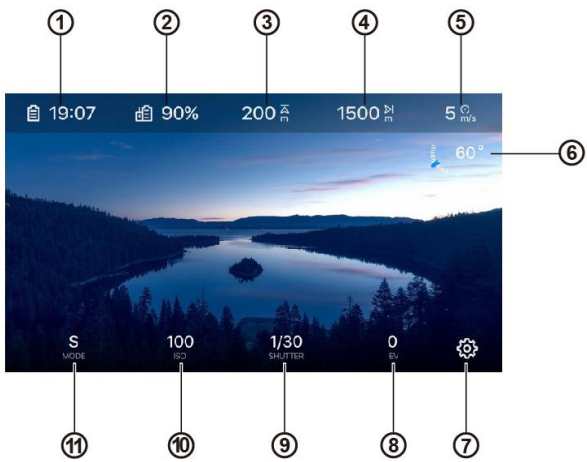

① Remaining Flight Time	Estimates how much longer the aircraft can stay in the air based on remaining battery level
② Remote Control Battery	Displays the remaining battery level
③ Altitude	Displays the aircraft altitude relative to the home point
④ Distance	Displays the horizontal distance between the aircraft and the home point
⑤ Flight Speed	Displays the current speed of the aircraft
⑥ Gimbal Angle	The number indicates the angle of the gimbal in degrees. The blue arrow will move as the gimbal angle changes
⑦ Settings	Press to access the **Settings** page
⑧ EV	The **Exposure Value** (**EV**) is a combination of both

	the **ISO** and shutter speed, and is used when the camera is set to **Auto**. Adjust the **EV** to increase or decrease the exposure
⑨ Shutter	Fast shutter speeds let you capture action in motion; slow shutter speeds are suitable for low-light scenarios
⑩ ISO	This setting adjusts the images sensor to the sensitivity to light. A lower **ISO** is suitable for bright sunlight, and a high **ISO** is suitable for low-light scenarios but will increase image noise.
⑪ Exposure Mode	Set your camera to **Manual** in order to adjust your **ISO** and shutter speed, or choose **Auto** and let the camera make adjustments for you • **Manual**: The **EV** setting will be disabled • **Auto**: The **ISO** and shutter speeds will be disabled • **Shutter Priority**: Shutter speed and EV can be adjusted.

• Settings

➢ Basic Instructions

1. Scroll the **Screen Navigation Dial** to highlight different setting options on the top of the screen.
2. Press the **Screen Navigation Dial** to enter the highlighted option, or press the **Screen Navigation Button** (**DISP**) to go back.
3. Scroll the **Screen Navigation Dial** again to set different values.
4. Press the **Screen Navigation Dial** to confirm this value, or press the **Screen Navigation Button** (**DISP**) to go back.

➢ Camera Settings

Camera Mode	Video, Single, Burst (3/5/7/14), Time Lapse (2/5/7/10/20/30/60), AEB (3/5), NIGHTBEAT
Video Resolution	8K (7680x4320), 6K (5670 x 3240), 4K (3840 x 2160), 2.7K (2720 x 1528), 1080p (1920 x 1080)
Video Frame Rate	120 fps, 60 fps, 50 fps, 48 fps, 30 fps, 25 fps, 24 fps
Photo Resolution	8000 x 6000, 7680 x 4320, 4000 x 3000, 3840 x 2160
Photo Format	JPG, RAW, JPG+RAW
HDR	On/Off
Display Mode*	Visible, Infrared, PiP
False Color Mode*	White hot, Black hot, Rainbow, RainHC, Ironbow, Lava, Arctic, Glowbow, Graded Fire, Hottest

*Applies to dual-sensor camera only

➢ Flight Control Settings

- Turn **Novice Mode** on/off.
- Choose the **Speed Limit** value.
- Adjust the **Go-Home Altitude**, **Altitude Limit**, and **Distance Limit**.

NOTE

When **Novice Mode** is activated, the aircraft will operate with a fixed maximum **Go-Home Altitude** of 30 m (90 ft), a **Speed Limit** of 5 m/s (15 mph), an **Altitude Limit** of 30 m (90 ft), and a **Distance Limit** of 100 m (300 ft). These limit settings cannot be changed.

➢ Remote Control Settings

1. Command Stick Mode

Mode 1, **Mode 2** and **Mode 3** allow you to control the aircraft according to your preferences, as illustrated below.

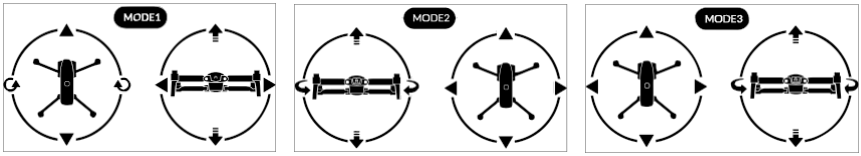

Indicator Icons		Aircraft Movement	
		Ascend	Descend
/	/	Nose rotates left	Nose rotates right
		Move forward	Move backward
		Move left	Move right

2. Remote Control Calibration

For detailed calibration instructions, see **Section 3.2.3** (42).

➢ Vision Settings

Access these settings to turn **Visual Obstacle Avoidance** on/off and select **Show Radar Map**.

➢ **General Settings**

1. **Language:** Select the displayed language.
2. **Units:** Choose the unit of measurement displayed in **Flight Control Settings**: Metric (m/s), Metric (km/h) or Imperial.
3. **Format SD Card:** Use this to ensure that your SD card is in an acceptable format.
4. **Reset Camera:** Use this to restore all the camera settings to default.

2.2.3 Indicator Lights

To check the remote control's remaining power level without powering it on, press the power button quickly.

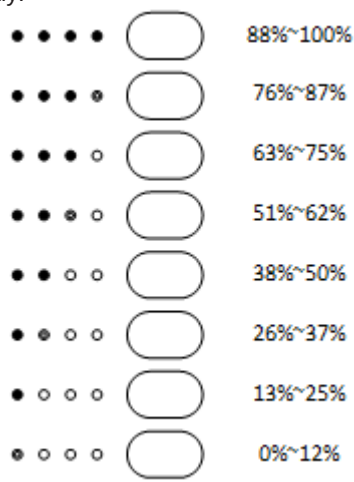

2.2.4 Remote Control Buzzer Alerts

The table below describes the various buzzer alerts and their corresponding meanings.

Remote Control Buzzer Alerts	
Aircraft Low Battery Warning (about 25%)	1 quick beep every second for 5s, with 2 remote control vibrations

Aircraft Critically Low Battery Warning (about 15%)	5 quick beeps every second for 5s, with 5 remote control vibrations
Remote Control Low Battery Warning (10%)	1 quick beep every second for 5s
Remote Control Critically Low Battery Warning (5%)	5 quick beeps every second for 3s, with two remote control vibrations
Aircraft & Remote Control Communication Lost	2 quick beeps every second for 5s, with 1 remote control vibration
Video Link Disconnected	3 quick beeps in 1s
Compass Interference	3 beeps with 3 remote control vibrations
Standby Notification	3 beeps every 15 minutes of inactivity

Chapter 3

Preflight Preparation

The **EVO 2** features a user-friendly design and comes fully assembled out of the box. In order to ensure safe drone operation, please read the instructions and warnings below before your first flight.

3.1 Battery Preparation

3.1.1 Aircraft Battery Installation

1. Power off the battery before installing it.
2. Insert the battery into the battery compartment as shown on the right. The battery will firmly click into place.

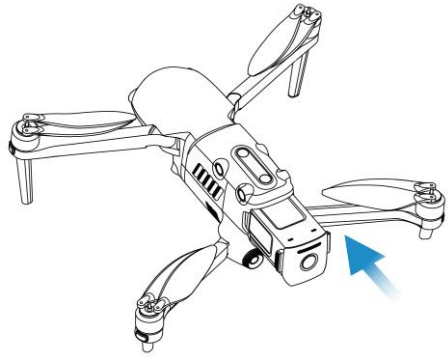

3.1.2 Aircraft Battery Removal

1. Power off the aircraft battery before removal.
2. Press and hold the finger grips on each side of the battery and pull it out slowly.

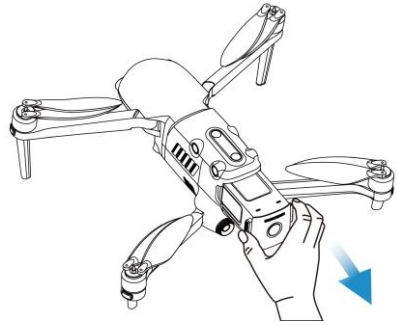

3.1.3 Charging

The aircraft battery and remote control can be charged simultaneously using the supplied charger. There are two connectors attached to the charger's adapter block. As shown below, the fixed cable goes with the aircraft battery, and the USB cable is used to charge the remote control.

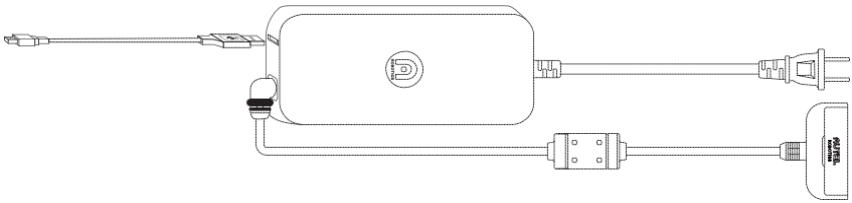

➢ **Charging the aircraft and remote control**

1. Plug the charging cable in as follows:

Aircraft Battery: Plug the charging connector into the battery's charge port.

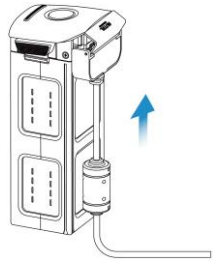

Remote Control: Open the protector on the USB port and plug in the provided charging cable.

2. Plug the charger into a power outlet.

➢ **Battery Level Indicators:** The LEDs on the aircraft battery will illuminate from left to right to indicate the current battery level during the

charging cycle, and will turn off when the battery is fully charged.

Battery Level Indicator Statuses (While Charging)			
0%~25%	26%~50%	51%~75%	76%~100%
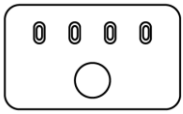	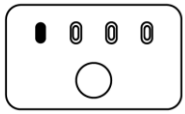	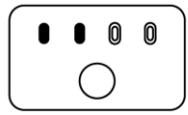	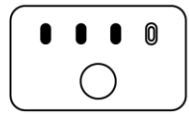
▮ - Solid Green Light		0 - Flashing Green Light	

➢ **During Charging:** The **Power Button** (⏻) on the remote control will be green when it is powered on, and red when it's powered off. You can monitor the charging process on the **Flight Information Panel**. You'll hear 2 beeps when charging is complete.

4. When charging is complete, disconnect the charger and the aircraft battery/ remote control.

NOTE

- Always fully charge the aircraft and remote control battery before flying.
- It takes approximately 90 minutes to fully charge the aircraft battery, and 180 minutes to charge the remote control.

3.2 Remote Control Preparation

3.2.1 Unfolding the Remote Control

The remote control is folded in the package. Carefully unfold the **Mobile Device Holder** and **Antennas** before use to prevent damage and to ensure optimal range of flight.

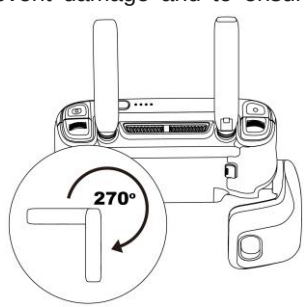

NOTE

The antennas can be rotated 270 degrees as shown in the diagram.

- **Positioning the Antennas**

Vertically align the antennas in parallel with each other, as shown below.

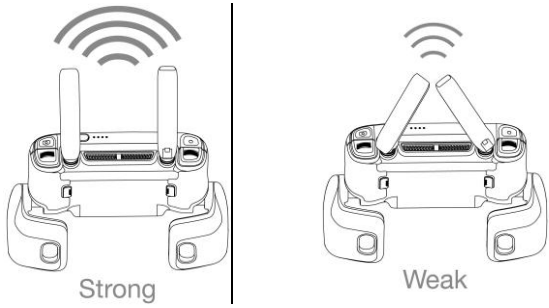

3.2.2 Powering On/Off the Remote Control

- **Powering On**

Press and hold the **Power Button** (⏻) for 2 seconds until you hear a short beep. The **Flight Information Panel** will light up and cycle through an initial verification test.

IMPORTANT

Always turn on the remote control first before powering on the aircraft.

- **Powering Off**

Press and hold the **Power Button** (⏻) for 2 seconds until you hear a short beep.

IMPORTANT

Always power off the aircraft before turning off the remote control.

NOTE

When not connected to the aircraft, the remote control beeps after 15 minutes of inactivity, and turns off automatically after 18 minutes.

3.2.3 Remote Control Calibration

If the **Command Sticks** are abnormal (for example, if the remote control is

dropped on the ground, or the aircraft's flight direction does not match control inputs), it is recommended to calibrate the remote control. You can calibrate the remote control by using the **Autel Explorer™** app (for details, see the **App Manual**) or according to the following steps.

1. Turn off the remote control. Press and hold the **Power Button** ( ) and **Take-off/Landing Button** ( ) simultaneously until the screen appears as shown on the right. The four crossed bars represent the left and right **Command Sticks**. The horizontal bar at the top is the **Gimbal Pitch Dial**.

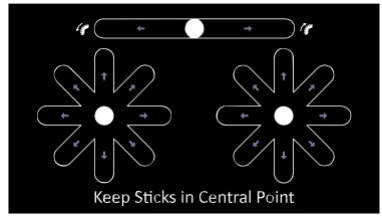

2. Release both **Command Sticks** and the **Gimbal Pitch Dial** naturally to the central position. The three middle rounds on the remote control calibration screen will be highlighted successively.

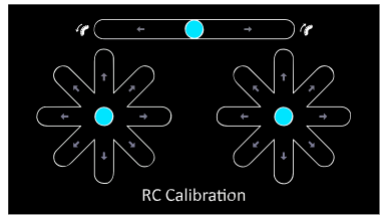

3. Push and hold the **Command Sticks** in each of the eight possible directions until you hear a beep each time. Then, turn the **Gimbal Pitch Dial** clockwise until you hear a beep, and then counterclockwise until you hear a beep.

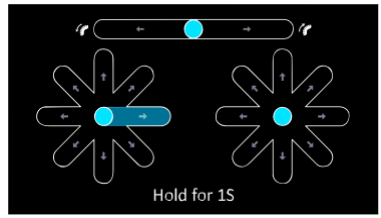

4. Calibration is completed when all the bars on the screen are highlighted.

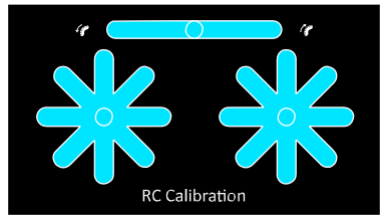

3.2.4 Pairing the Aircraft & Remote Control

The remote control and aircraft come paired out of the box. When you need to pair them again — such as after pressing the **Remote Control Pairing Button** on the aircraft — follow these steps:

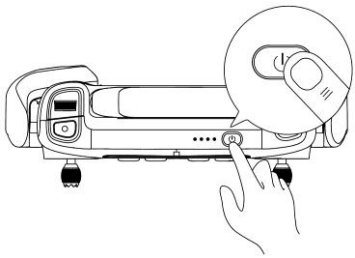

1. Turn **off** the remote control.

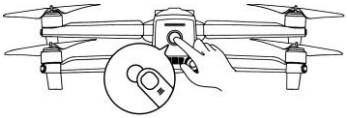

2. Remove the gimbal guard first, and then turn **on** the aircraft .

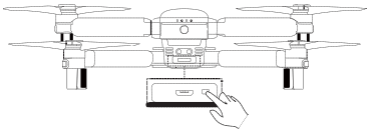

3. Press and hold the **Remote Control Pairing Button** on the lower right side of the aircraft for 3 seconds. The **Pairing Indicator** will flash quickly, indicating the aircraft is ready to pair with the remote control.

4. Simultaneously press and hold the **Power Button** ( ) and **Go Home Button** ( ) simultaneously for 2 seconds until "**Autel**" appears on the **Flight Information Panel**. The **Pairing Indicator** on the aircraft will turn off once pairing is successful.

5. To pair a secondary remote control, simultaneously press the **Power Button** ( ) and **Customizable Button B** ( ) until "**Autel**" appears on the **Information Panel**.

3.3 Aircraft Preparation

3.3.1 Unfolding the Aircraft

- **Removing & Reinstalling the Gimbal Holder**

Always remove the gimbal holder before powering on the aircraft. Slowly pull out the attached gimbal holder, as shown below.

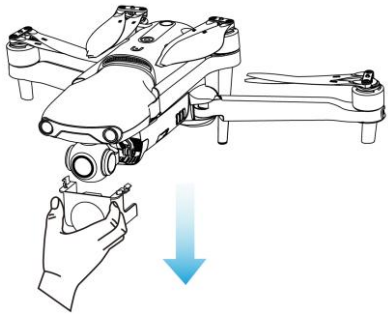

After using the aircraft, reinstall the gimbal holder to protect the gimbal from damage.

- **Unfolding the Arms & Propellers**

  - Always unfold the arms and propellers before powering on the aircraft.
  - Unfold the front arms first, and then the rear arms.

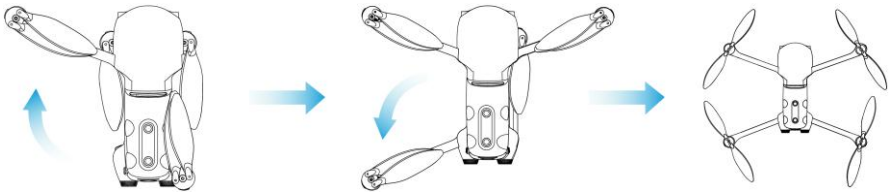

IMPORTANT

Power off the aircraft before folding it. Fold in the rear arms and propellers

first, and then the front arms.

3.3.2 Propeller Installation

WARNING

Power off the aircraft before attaching or detaching propellers.

IMPORTANT

Wear protective gloves when attaching or detaching propellers.

Legend

Lock Direction: Fasten the propeller by rotating it as indicated.

Unlock Direction: Unfasten the propeller by rotating it as indicated.

Black-coded propeller > Pairs with > Black-coded motor

White-coded propeller > Pairs with > white-coded motor

- **Attaching the Propellers**

1. Verify that the aircraft is powered off.
2. Locate and match the propeller to each motor.
3. Press each propeller down firmly and rotate in the lock direction to securely attach the propeller.

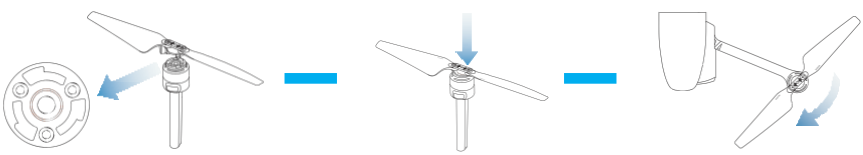

- **Detaching the Propellers**

1. Power off the aircraft.
2. Press each propeller down firmly and rotate in the unlock direction to detach the propeller.

IMPORTANT

- Before flight, verify that every propeller is securely attached.
- Never fly with broken or damaged propellers.
- Don’t touch the propellers or motors while they’re spinning.

• Always remove the propellers before testing the motors.

3.3.3 Compass Calibration

Because the compass is calibrated out of the box, user calibration is typically unnecessary. If compass error messages appear, or the aircraft's flight direction does not match control inputs, or you fly the aircraft at a very long distance from your calibration position, follow the steps below to calibrate it.

WARNING

The compass is very sensitive to electromagnetic interference causing compass error and poor flight. If the compass is still not functioning properly after calibration, move the aircraft to another location and try again.

When calibrating the compass, remember to:

- Set up in an open outdoor area.
- Stay clear of all sources of magnetic interference, such as magnetite or steel reinforcements in concrete. Proximity to large structures may also affect calibration results.
- Stay well clear of underground and overhead power lines.
- Remove all ferromagnetic materials (such as keys or magnetic jewelry).
- Stay away from electronic devices that might interfere with the calibration (such as mobile devices).

- **Calibration Procedure**

1. Start the calibration process by pressing the **Take-off/Landing Button** ( ) and **Go Home Button** ( ) on the remote control simultaneously for 3 seconds. The **Rear LED Indicators** on the aircraft will flash yellow when the calibration process initiates.

2. Hold the aircraft horizontally and rotate it until the **Rear LED Indicators** on the aircraft turn solid green.

3. Hold the aircraft vertically with the nose facing downward and rotate it until the **Rear LED Indicators** on the aircraft turn solid green.

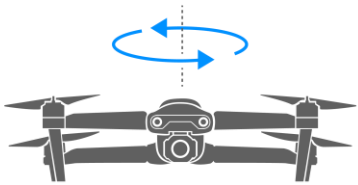

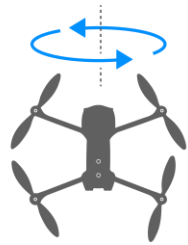

NOTES

- If the calibration is unsuccessful, the **Rear LED Indicators** on the aircraft will turn solid red. In this case, repeat the above steps.
- You can also calibrate the compass using the **Autel Explorer**™ app. Find out how in the **App Manual**.

Chapter 4

Flight Operations

4.1 Preflight Checklist

Follow these steps to carry out a full preflight checkup:

- Fully charge the aircraft battery, remote control, and your mobile device.
- Remove the gimbal holder.
- Verify that the propellers are in proper condition and are correctly attached.
- Position the antennas on the remote control as described in section 3.2.1.
- Pair the aircraft and remote control and your mobile device.
- Verify that the firmware has been updated to the latest version.
- Make sure you are familiar with the flight controls.
- Verify that your flight area is open and unobstructed.
- Check the weather, including air temperature and wind speed.
- Verify that the aircraft's camera lens and sensors are clean.

4.2 Remote Control & Flight Operations

There are three **Command Stick Modes** available for the aircraft: **Mode 1**, **Mode 2** and **Mode 3**. Each one controls the aircraft differently. The diagrams below apply to **Mode 2**, which is the default. For information on how to change the **Command Stick Mode**, see the **App Manual**.

- **Basic Flight**

1. Place the aircraft in an open area. Stand at least 5 meters (15 feet) clear of the rear of the aircraft.
2. Turn on the remote control.
3. Turn on the aircraft and wait for the **Rear LED Indicators** to flash green slowly.

4. Start the motors and take off using the remote control.
5. Pilot the aircraft carefully.
6. Land the aircraft, and then shut down the motors.

4.2.1 Motor Start & Aircraft Takeoff

NOTE

The aircraft will not take off if the battery level is 15% or lower.

➢ Start the motors by holding both **Command Sticks** in position for 2 seconds:

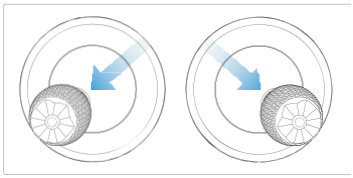

OR

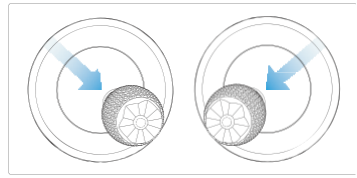

➢ With the motors spinning, choose either of the following takeoff commands:

Hold the Takeoff/Landing Button for 2s

OR

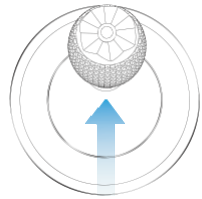

Push the Left Command Stick slowly upward (Mode 2)

If you choose to use the **Take-off/Landing Button** ( ), the aircraft will automatically ascend to a height of roughly 1.5 meters (4.5 feet).

WARNING

The motors will heat up during operation. Please handle with care.

4.2.2 Command Stick Controls (Mode 2)

TIPS

If you are new to flying, move the **Command Sticks** slowly until you become familiar with operating the aircraft.

- **Left Command Stick**

➢ **Ascend/Descend**

Control the ascent and descent of the aircraft by pushing the stick up or down.

Left Side View

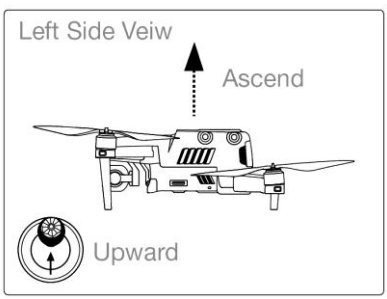

Left Side View

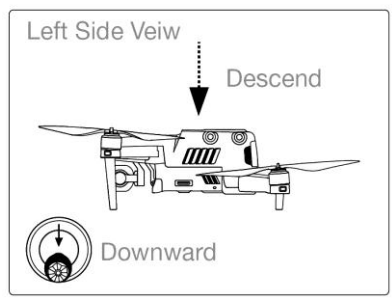

➢ **Rotate Left/Rotate Right**

Control the heading of the aircraft by pushing the stick left or right.

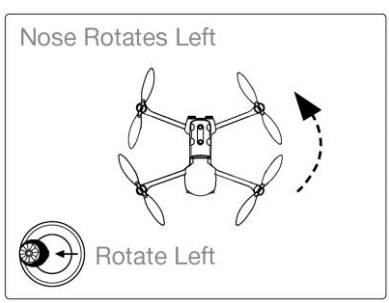

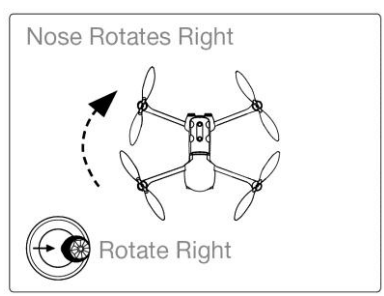

- **Right Command Stick**

➢ **Forward/Backward**

Control the forward and backward movement of the aircraft by pushing the stick up or down.

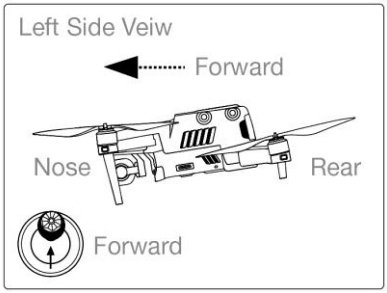

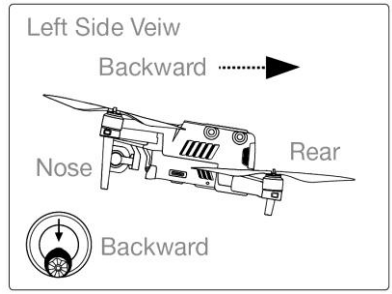

➢ **Move Left/Move Right**

Control the leftward or rightward movement of the aircraft by pushing the stick left or right.

Rear View

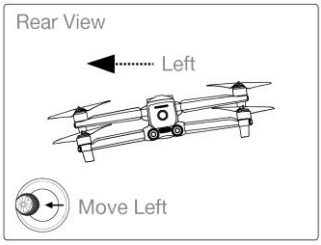

Rear View

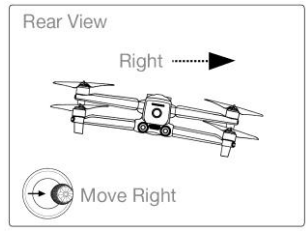

4.2.3 Landing & Motor Shutdown

The **EVO 2** can be landed manually, automatically, or passively. Follow the steps below to land the aircraft by each of these methods.

IMPORTANT

Always land gently on a flat, level, open surface.

- ## Manual Landing

You can land the aircraft manually whenever and wherever you want using the **Command Sticks** on the remote control.

➢ **Landing the aircraft manually**

1. Find the desired position for landing the aircraft.

2. When the aircraft reaches the target position, release the **Command Sticks** to let it hover.
3. Push the **Left Command Stick** downwards slowly to land the aircraft.

➢ Shutting down the motors

Choose one of the following methods to shut down the motors after the aircraft reaches the ground:

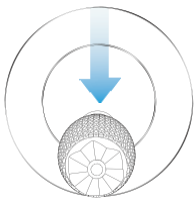

Push the Left Command Stick to the bottom and hold for 2s

OR

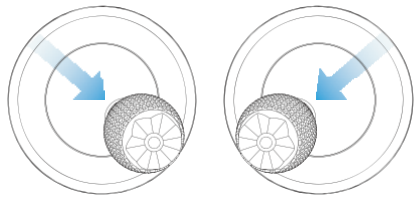

Hold both Command Sticks toe-in for 2s

⚠ WARNING

The toe-in action will always shut down the motors even if the aircraft is in midair. Exercise caution and use this feature only in an emergency.

• Automatic Landing

Press the **Take-off/Landing Button** ( ) on the remote control to land the aircraft automatically from its current hover position.

1. Navigate the aircraft to the target landing position.
2. Release the **Command Sticks** and let the aircraft hover.
3. Press and hold the **Take-off/Landing Button** ( ) for 2 seconds until you hear a beep from the remote control.
4. The aircraft will descend, land and shut off its motors automatically. During descent, you can adjust the aircraft position using the **Right Command Stick**.

TIPS

During the automatic descent process, you can regain control by pressing the **Pause Button** ( ) on the remote control.

NOTES

- Automatic landing is also available in **ATTI** mode (12). However, the aircraft may drift in this mode, so you should monitor its altitude.
- When the **Low Battery Warning** (25%) is displayed, the aircraft's rear LEDs will flash red and the remote control **Power Button** (⏻) will turn solid yellow. At this point, return to a safe landing point as soon as possible.

• Passive Landing

Whenever either of the following conditions is met, **Failsafe** will be triggered and the aircraft will automatically land from its current position.

➢ The **Low Battery Warning** is activated in a non-GPS environment.

➢ The **Critically Low Battery Warning** is activated.

Chapter 5

Maintenance & Service

5.1 Firmware Updates

To optimize the performance of your **EVO 2**, Autel Robotics will provide firmware updates on an ongoing basis. You can download the latest firmware in one package from our official website. When a firmware update is available, you will receive a prompt on the **Autel Explorer™** app after connecting it to the aircraft.

IMPORTANT

Before performing a firmware update, make sure:

- The aircraft motors are not spinning.
- The battery levels of both the aircraft and the remote control are not lower than 25%.
- There's adequate space to store the firmware file on your camera's micro SD card.

• Downloading & upgrading the firmware

1. Download the all-in-one firmware upgrade package from Autel Robotics' official website: www.autelrobotics.com.
2. Insert the SD card into your computer and extract the downloaded file into your SD card. Then remove your SD card from the computer.
3. Turn on the remote control and aircraft.
4. Insert the SD card into the aircraft to start the upgrade process automatically. You can check the real-time update status on the **Flight Information Panel**.
5. Reboot the remote control and aircraft before use.

IMPORTANT

- The update takes about 15 minutes. During the update process, don't turn off the aircraft or the remote control, start the motors, or remove your SD card from the camera.
- After upgrading, the remote control may be disconnected from the aircraft. If you need to pair them again, see section 3.2.4.

5.2 Troubleshooting Tips

Q1. If the aircraft indicates a failure during self-check (Rear LED Indicators will turn solid red):

- A hardware problem has been detected. Please contact Autel Robotics customer support here: www.autelrobotics.com/contact-us/

Q2. If the motors fail to start up, verify the following:

- The remote control and the aircraft are paired.
- The remote control is calibrated correctly.
- The aircraft battery is fully charged.
- The compass is calibrated correctly.
- GPS is available (if **Novice Mode** is activated).

Q3. If takeoff fails after starting motors, verify the following:

- The aircraft is not in a no-fly zone.
- The aircraft is on a flat, level surface

Q4. If flight time is unexpectedly short:

- The most common cause of reduced flight time is a low environmental temperature.

Q5. If the aircraft does not respond to the remote control during the pairing process:

- Verify that there are no metal objects, mobile devices or other remote controls nearby.

Q6. If Video Link fails or disconnects frequently:

- Verify that both the aircraft and the remote control are free from sources of magnetic or signal interference.

Q7. If the camera powers off while recording video:

- Keep the micro SD card inside the camera. Restart the camera and wait until the video files are recovered to their fullest possible extent.

Q8. If the video link is lost when the aircraft is out of sight:

- Initiate **Go Home** to command the aircraft to automatically return to the home point

5.3 Storage & Maintenance

To ensure optimum **EVO 2** performance, please read and follow the maintenance instructions in this section carefully.

- Store the aircraft, the battery and the remote control in an environment that's clean, dry, cool and ventilated.
- Keep the aircraft out of sunlight when not in use.
- Dry your hands before operating the drone.
- Use a soft cloth with alcohol or a mild window cleaner to clean the lens of the camera. Do not use any rough cleansers, detergent or chemicals.
- Ensure that the battery charger does not come in contact with other conductive materials.
- Avoid dropping the aircraft and its accessories, especially on a hard surface. Check all parts carefully after any crash or impact. If you encounter any damage, contact Autel Robotics customer support.
- Exclusively use accessories such as battery chargers authorized by Autel Robotics. Using unapproved accessories will void warranty coverage.

5.4 Warranty

Autel Robotics (the Company) warrants to the original retail purchaser of this product, that should this product or any part thereof during normal consumer usage and conditions, be proven defective in material or workmanship that results in product failure within the valid warranty period from the date of purchase, such defect(s) will be repaired, or replaced (with new or refurbished parts or products) at the Company's option, with Proof of Purchase, without charge for parts or labor directly related to the defect(s). Some states do not allow limitation on how long an implied warranty lasts, so the above limitations may not apply to you.

The Company shall not be liable for any incidental or consequential damages arising from the use, misuse, or mounting of the device. The extent of Autel Robotics' liability under this warranty is limited to the repair and replacement provided above and, in no event, shall its liability exceed the purchase price paid by purchaser for the product. Visit www.autelrobotics.com for details of the limited

periods warranted for the different parts of this product.

This warranty does not apply to:

- Batteries that have been put through a full charging cycle more than 200 times under normal temperature conditions or more than 100 times in high temperatures;
- Batteries that have been stored for more than 1 month at temperatures of higher than 40°C (104°F);
- Products subjected to abnormal use or environmental conditions, accident, mishandling, neglect, unauthorized alteration, misuse, improper installation or repair, or improper storage;
- Products with signs of tampering or altering of the serial number label, waterproof mark, etc.;
- Damage resulting from connection to, or use of any accessory or other product not approved or authorized by the Company;
- Defects in appearance, cosmetic, decorative or structural items such as framing and non-operative parts.
- Products damaged from external causes including but not limited to fire, water, dirt, sand, battery leakage, blown fuse, theft or improper usage of any electrical source.

5.5 Customer Service

This section contains information regarding technical support, repair service, and application for replacements or optional parts.

5.5.1 Technical Support

If you have any questions or concerns regarding our products, please contact Autel Robotics customer support:

- Telephone: (844) 692-8835 (USA)
- Email: support@autelrobotics.com
- In person: local distributors or agents

5.5.2 Repair Service

If you need to return your device for repair, please fill out and submit a repair service form on www.autelrobotics.com/warranty/ or contact Autel Robotics customer support at **(844) 692-8835**. You'll need to provide the following information:

- Name
- Email address
- Mailing address
- Telephone number
- Product name
- A complete description of the problem, with photo attachments
- For warranty repairs: proof of purchase
- For non-warranty repairs: Preferred method of payment

Autel Robotics customer support will conduct a preliminary evaluation of the problem and contact you within 2 days.

Chapter 6

Appendix

6.1 Regulatory Compliance & Flight Restricted Area

6.1.1 Compliance & Advisory

FCC Warning Message

Any Changes or modifications not expressly approved by the party responsible for compliance could void the user's authority to operate the equipment.

This device complies with part 15 of the FCC Rules. Operation is subject to the following two conditions: (1) This device may not cause harmful interference, and (2) this device must accept any interference received, including interference that may cause undesired operation.

FCC Radiation Exposure Statement

For EVO 2 Series / EVO 2

This equipment complies with FCC radiation exposure limits set forth for an uncontrolled environment. This equipment should be installed and operated with minimum distance 20cm between the radiator & your body. This transmitter must not be co-located or operating in conjunction with any other antenna or transmitter.

For EVO 2 Series with model EF8, SAR tests are conducted using standard operating positions accepted by the FCC/ISEDC with the device. When used, please keep the distance with a minimum of 10mm from the body.

Note: This equipment has been tested and found to comply with the limits for a Class B digital device, pursuant to part 15 of the FCC Rules. These limits are designed to provide reasonable protection against harmful interference in a residential installation. This equipment generates uses and can radiate radio frequency energy and, if not installed and used in accordance with the instructions, may cause harmful interference to radio communications. However, there is no guarantee that interference will not occur in a particular installation. If this equipment does cause harmful interference to radio or television reception, which can be determined by turning the equipment off and on, the user is encouraged to try to correct the interference by one or more of the following measures:

—Reorient or relocate the receiving antenna.

—Increase the separation between the equipment and receiver.

—Connect the equipment into an outlet on a circuit different from that to which the receiver is connected.

—Consult the dealer or an experienced radio/TV technician for help.

ISEDC RSS Warning

This device complies with ISEDC licence-exempt RSS standard (s). Operation is subject to the following two conditions: (1) this device may not cause interference, and (2) this device must accept any interference, including interference that may cause undesired operation of the device.

Le présent appareil est conforme aux CNR d'Industrie Canada applicables aux appareils radio exempts de licence.

L'exploitation est autorisée aux deux conditions suivantes:

(1) l'appareil ne doit pas produire de brouillage, et

(2) l'utilisateur de l'appareil doit accepter tout brouillage radioélectrique subi, même si le brouillage est susceptible d'en compromettre le fonctionnement.

ISEDC Radiation Exposure Statement

For EVO 2 Series / EVO 2

This equipment complies with ISEDC RF radiation exposure limits set forth for an uncontrolled environment. This transmitter must not be co-located or operating in conjunction with any other antenna or transmitter. This equipment should be installed and operated with minimum distance 20cm between the radiator & your body.

For EVO 2 Series with model EF8, SAR tests are conducted using standard operating positions accepted by the FCC/ISEDC with the device. When used, please keep the distance with a minimum of 10mm from the body.

Any changes or modifications not expressly approved by the party responsible for compliance could void the user's authority to operate the equipment.

6.1.2 Flight Restricted Area Illustration

The **EVO 2** system automatically recognizes flight restricted areas, in which flights are limited by default. This feature ensures that the aircraft complies with legal flight area requirements. Flight restrictions are enforced only within countries which require manufacturer restrictions by law. Currently, Mainland China is the only country/region that requires manufacturers to impose flight restrictions.

The flight restricted areas are divided into 2 protection categories.

NOTE

The pilot is responsible for ensuring compliance with all relevant flight rules and regulations.

Category I: Major airports & flight areas where drones operate at low altitudes

- **Take-off Restricted Zones (No-Fly Zones)**

These areas are set within 2.4 km (1.5 mi) (based on country-imposed rules) around the midway point of specified locations.

- **Altitude Restricted Zones**

In these areas, the aircraft is only allowed to fly within limited altitudes. Depending on the government-imposed rules, from 8 km (5 mi) to 2.4 km (1.5 mi) around the location's midway point, the flight altitude decreases progressively from 120 m (40 ft) to 10.5 m (3.5 ft).

- **Warning Zones**

Once the aircraft enters a region within 8.1 km of the central point of the airport, a warning message will be displayed on the **Autel Explorer™** app.

NOTE

The aircraft will land automatically when entering any **Take-off Restricted Zones**. If the aircraft enters any **Altitude Restricted Zones**, its maximum allowable altitude will be reduced accordingly. Pay particular attention to the warning messages displayed on the **Autel Explorer™** app.

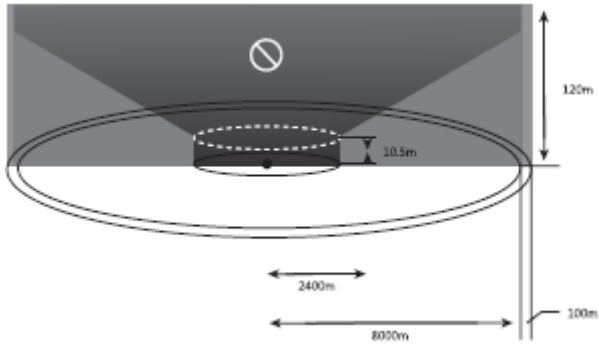

Category II: Sensitive areas & institutes such as military sites & border lines between nations

- **Take-off Restricted Zones (No-Fly Zones)**

These areas are set within 1 km (0.5 mi) of the center of the specified locations where takeoff and flight are prohibited.

- **Warning Zone**

Once the aircraft enters a region within 2 km (1 mi) of the center of the **Warning Zone** site, the app will display a warning message.

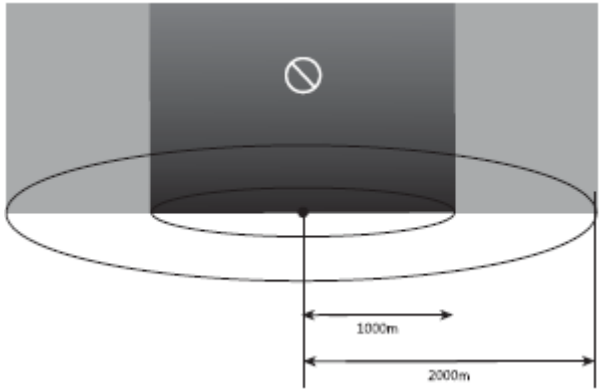

6.2 Specifications

Aircraft Specifications	
Max. Take-off Weight	1000 g (2 lb 3 oz)
Hover Precision	GPS + Ultrasonic + IMU: Horizontal: ±1.5 m (5 ft); Vertical: ±0.2 m (8 in); Vision+IMU: Horizontal: ±0.1 m (4 in); Vertical: ±0.1 m (4 in)
Max. Yaw Rate	200 dps
Max. Inclination Angle	35°
Max. Ascent/Descent Speed	Ascent: 5 m/s (11 mph) Descent: 3 m/s (7 mph)
Max. Horizontal Speed	20 m/s (45 mph)
Diagonal Wheelbase	338 mm (13 in)
Propeller Size	229 mm (9 in)
RF Frequency	2400 - 2483.5 MHz
	902 - 928 MHz
Flight Modes	GPS Mode, ATTI Mode
Operating Environment Temperature	0°C to 40°C (32°F to 104°F)

Storage Temperature	-10°C to +40°C (14°F to 104°F)
Weight (Battery & Propellers included)	1050 g (2 lb 5 oz)

Aircraft Battery Specifications	
Battery Type	Lithium-Polymer
Capacity	7100 mAh
Battery Voltage	11.55 V
Charging Environment Temperature	5°C to 45°C (50°F to 113°F)
Discharging Environment Temperature	-20°C to +60°C (-4°F to +140°F)
Storage Temperature & Humidity	Temp: -10°C to +40°C (14°F to 104°F) Humidity: 65±20%RH
Flight Time	35 min

Gimbal Specifications	
Operating Current	150mA @ 12V (when not recording video)
Input Voltage	12 V
Operating Temperature	-10°C to +50°C (14°F to 122°F)
Weight	70 g (3 oz) including camera
Dimensions (Damping Device excl.)	42 mm x 49 mm x 45 mm (1.7 in x 1.9 in x 1.8 in)
Control Accuracy	Pitch: ±0.015° Roll: ±0.015° Yaw: ±0.015°
Max. Angular Velocity	Pitch: ±200°/S Yaw: ±200°/S
Controllable Range	Pitch: 0°~90° Yaw: ±50°

Camera Specifications	
Operating Environment Temperature	0°C to 40°C (32°F to 104°F)
Still Photography Modes	Single shot Burst shooting Auto Exposure Bracketing (AEB) Time-lapse
Video Recording Modes	Normal
Max. Field of View	79°
Supported SD Card Types	Micro SD card
Lense Diameter	25 mm (1 in)
Camera Bit Rate	100M

Storage capacity	4 GB - 128 GB
File Formats	FAT32/exFAT Photo: JPG/DNG Video: MOV/MP4

Remote Control Specifications	
OLED Screen Nits	330
Max. Operating Time	3.2 h
RF Frequency	2400 - 2483.5 MHz
	902 - 928 MHz
Operating Temperature	0°C to 40°C (32°F to 104°F)
Storage Temperature	1 year: -20°C to +25°C (-4°F to 77°F) 3 months: -20°C to +45°C (-4°F to 113°F)
Max. Control and Video Transmission Distance	7 km (4.3 mi)
Transmission Power (EIRP)	FCC: ≤26 dBm CE: ≤20 dBm
Operating Current/Voltage	1.5A @ 3.7V
Battery	5000 mAH
Power Consumption	5.6 W
Weight (battery included)	500 g (13 oz)

© Autel Robotics Co.,Ltd. All Rights Reserved