Solar Powered Wind & Light Sensor

MT02-0301-072001
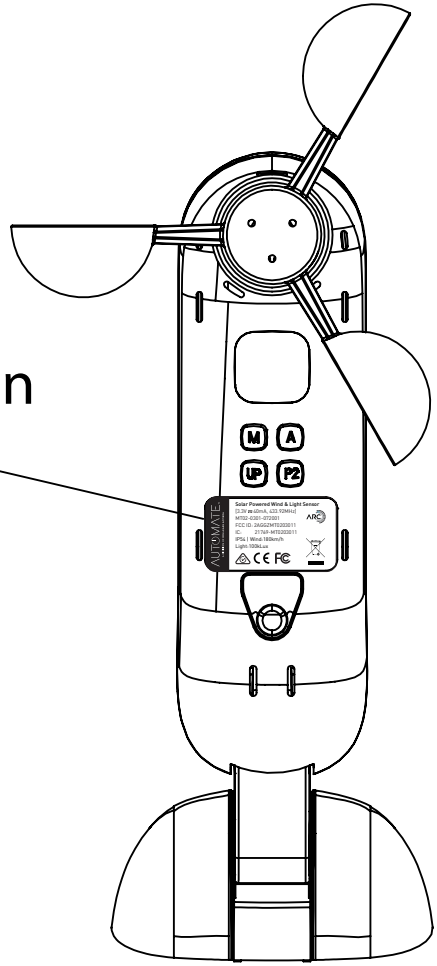
Product Label Location