wizarPOS

400-608-2601

V1.1, 201801

WIZARPOS Q2

User Manual

www.wizarpos.com

Thank you for using the
wizarPOS International Co., Ltd. Products!

Intelligent + Security

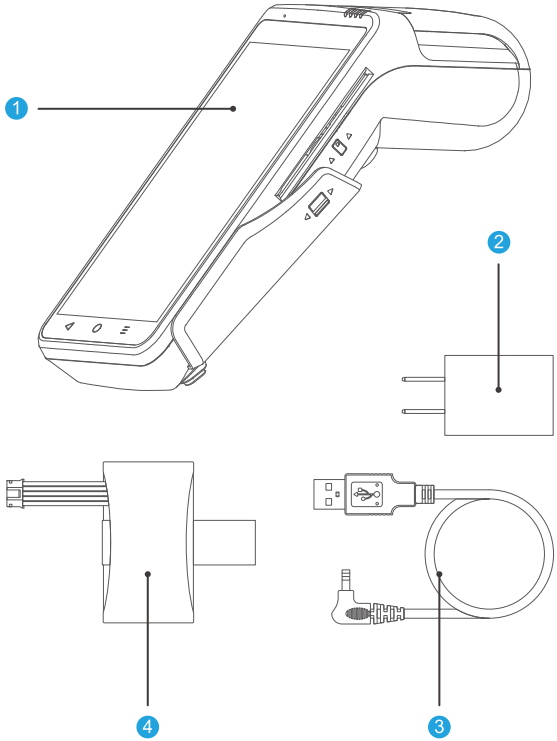

1 Q2

2 5V Adapter

3 DC Cable

4 7.2V Lithium Battery

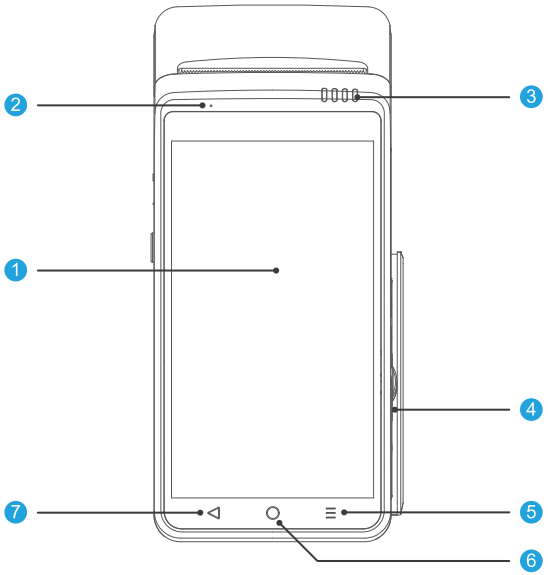

1 5.5” Capacitive Touch Screen

2 MIC

3 4 Indicators

4 Magnetic Card Reader

5 Menu Button

6 Home Button

7 Return Button

Left

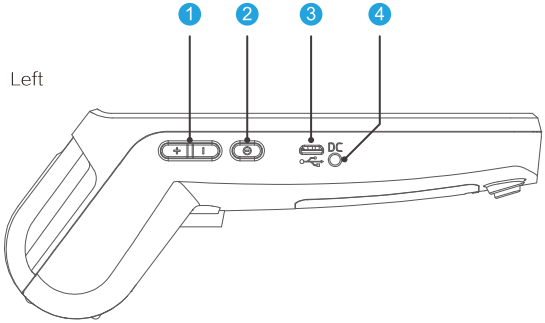

Right

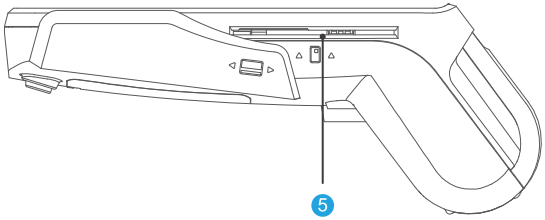

1 Volume Keys

2 Power Key

3 Micro USB Port

4 DC Port

5 IC Card Reader

Top

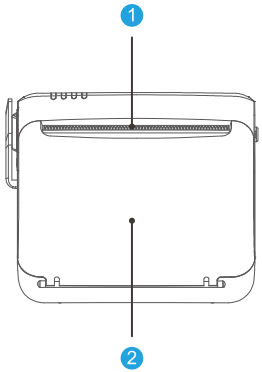

Bottom

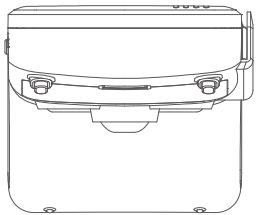

1 58mm Thermal Printer

2 Contactless Card Reader

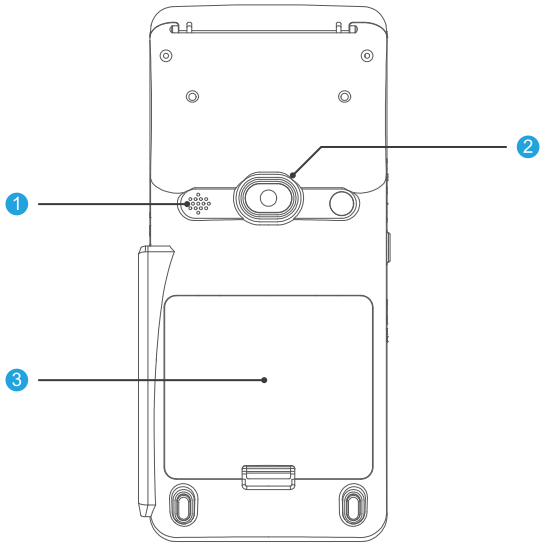

1 Speaker

2 Camera

3 Battery Compartment Cover

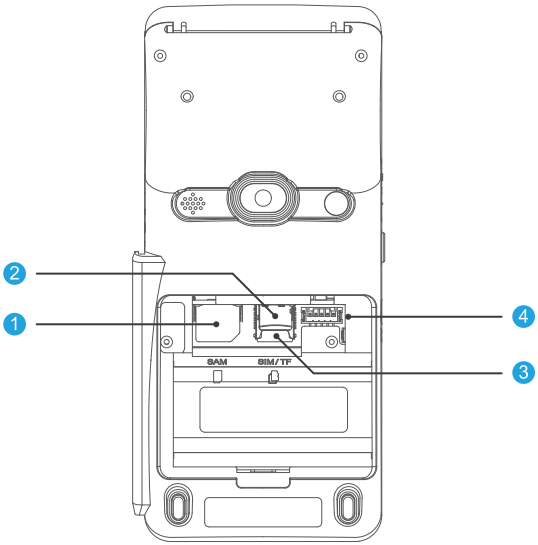

1 SAM Card Slot

2 TF Card Slot

3 Micro SIM Card Slot

4 Battery Connector

1 Before use

a) Please install the battery first, and fix the battery cover.

b) Please charge if the battery has not enough energy.

c) Load the paper roll, and close the printer cover.

2 Power on and off

a) Press "power" key for 3 seconds, you can power on the POS.

b) After secure booting, it will display desktop, you can operate the POS.

c) You can turn on/off the LCD by quickly press the "Power" key.

d) When the POS is power on, press "power" key for 3 seconds, it will display power off menu, follow the prompts to power off the POS.

3 System setup

a) Pull off the status bar at the top of desktop, it will display the notification interface.

b) Click the menu icon in upper right corner of the screen, it will display the function switch interface.

c) Click the "setup" icon, it will display the setup interface. Please setup the POS if you needed.

4 Payment operation

Please follow the instructions of your payment APP provider.

5 Bank card operation

a) Please insert IC card face up into the IC card reader.

b) Swipe the magnetic stripe card with magnetic stripe facing to screen, you can bi-directional swipe the card.

c) Place the contactless card close to the card reader area quickly.

Specification	Detailed Description
Software Platform	Secure Android 6.x
Processor	Qualcomm Snapdragon CPU
Memory	1GB RAM, 8GB Flash
Display	5.5" color LCD with touch panel (720 × 1280)
Printer	58mm High speed Thermal Printer
Scanner	barcode and 2D barcode scanner
Security Certification	PCI PTS 5.0
Contactless Card	ISO14443 Type A & B, Mifare, Contactless EMV Level 1, Mastercard Paypass, Visa Paywave
IC Card	ISO7816, EMV Level 1 & Level 2
MSR	ISO7811, Track 1/2/3, Bi-direction
Slots	SIM × 1, SAM × 1, TF card × 1
Communication	GSM, CDMA2000, WCDMA, FDD-LTE, TDD-LTE, Wi-Fi, BT
Audio	Built-in microphone, speaker
USB	Micro USB OTG
Battery	7.2V，2600mAh
Charging	5V 2A adapter，supports USB charging
Dimension	188 × 85 × 69 mm
Weight	415g (No printing paper)

All features and specifications are subject to change without notice.
Contact wizarPOS website for more details.
www.wizarpos.com

Function	Frequency	Maximal output power
EGSM850	824MHz-849MHz(TX); 869MHz -894MHz(RX)	33dBm(GMSK); 27dBm(8PSK)
EGSM900	880MHz-915MHz(TX); 925MHz -960MHz(RX)	33dBm(GMSK); 27dBm(8PSK)
DCS1800	1710MHz-1785MHz(TX); 1805MHz-1880MHz(RX)	30dBm(GMSK); 26dBm(8PSK)
PCS1900	1850MHz-1910MHz(TX); 1930MHz -1990MHz(RX)	30dBm(GMSK); 26dBm(8PSK)
WCDMA	B5:824MHz-849MHz(TX); 869MHz -894MHz(RX)	23dBm
CDMA	BC0:824MHz -849MHz (TX); 869MHz -894MHz(RX)	24dBm
LTE	B5:824MHz-849MHz(TX); 869MHz -894MHz(RX)	23dBm
	Band38:2570MHz~2620MHz(TRX)	23dBm
	Band39:1880MHz~1920MHz(TRX)	23dBm
	Band40:2350MHz~2360 MHz(TRX)	23dBm
	Band41:2555MHz~2655MHz(TRX)	23dBm
Bluetooth4.0	2402MHz -2480MHz	4 dBm
BLE	2402MHz -2480MHz	0 dBm
Wi-Fi	2412MHz -2472MHz(802.11b/g/n20)	15dBm
NFC	13.56MHz	N/A

Environment

Operating temperature
-5℃~ 40℃ (+23℉ to 104℉)

Operating humidity
5% ~ 95% (No condensation)

Storage temperature
-20℃~ 60℃ (-4℉ to 140℉)

Attention

- Do **NOT** refit the POS, that is illegal to privately refit financial POS.
- User shall bear the risks of installation and usage of third patty APPs.
- The system will became slow due to too many APPs installed.
- Pleases use dry cloth to clean the POS, Do **NOT** use chemical.
- Do **NOT** expose the POS under heavy sunlight for long time.
- Do **NOT** use sharp and hard objects to touch the screen.
- Do **NOT** throw the POS, charger or battery as common household garbage. Please support recycle according to local environment rules.

Warning

- Please use the original battery and charger, otherwise that may cause product damage or personal injury.
- Do **NOT** put the battery into fire, otherwise it will cause explosion.
- Do **NOT** short circuit battery, otherwise that will cause personal injury or battery permanent damaged.
- If battery is deformed or abnormal heat, discontinue use it and replace with new battery.

FCC Statement

Any Changes or modifications not expressly approved by the party responsible for compliance could void the user's authority to operate the equipment.
This device complies with part 15 of the FCC Rules. Operation is subject to the following two conditions:
(1) This device may not cause harmful interference, and
(2) This device must accept any interference received, including interference that may cause undesired operation.

ISED RSS Warning/ISED RF Exposure Statement

ISED RSS Warning:

This device complies with Innovation, Science and Economic Development Canada licence-exempt RSS standard(s). Operation is subject to the following two conditions: (1) this device may not cause interference, and (2) this device must accept any interference, including interference that may cause undesired operation of the device.

Le présent appareil est conforme aux CNR d'ISED applicables aux appareils radio exempts de licence. L'exploitation est autorisée aux deux conditions suivantes:
(1) l'appareil ne doit pas produire de brouillage, et
(2) l'utilisateur de l'appareil doit accepter tout brouillage radioélectrique subi, même si le brouillage est susceptible d'en compromettre le fonctionnement.

Note

Note: This equipment has been tested and found to comply with the limits for a Class B digital device, pursuant to part 15 of the FCC Rules. These limits are designed to provide reasonable protection against harmful interference in a residential installation. This equipment generates, uses and can radiate radio frequency energy and, if not installed and used in accordance with the instructions, may cause harmful interference to radio communications. However, there is no guarantee that interference will not occur in a particular installation.
If this equipment does cause harmful interference to radio or television reception, which can be determined by turning the equipment off and on, the user is encouraged to try to correct the interference by one or more

of the following measures:

—Reorient or relocate the receiving antenna.

—Increase the separation between the equipment and receiver.

—Connect the equipment into an outlet on a circuit different from that to which the receiver is connected.

—Consult the dealer or an experienced radio/TV technician for help.

RF Exposure Information (SAR)

This device meets the government's requirements for exposure to radio waves. This device is designed and manufactured not to exceed the emission limits for exposure to radio frequency (RF) energy set by the Federal Communications Commission of the U.S. Government.

The exposure standard for wireless devices employs a unit of measurement known as the Specific Absorption Rate, or SAR. The SAR limit set by the FCC is 1.6 W/kg. *Tests for SAR are conducted using standard operating positions accepted by the FCC with the device transmitting at its highest certified power level in all tested frequency bands. Although the SAR is determined at the highest certified power level, the actual SAR level of the device while operating can be well below the maximum value. This is because the device is designed to operate at multiple power levels so as to use only the poser required to reach the network. In general, the closer you are to a wireless base station antenna, the lower the power output.

The highest SAR value for the device as reported to the FCC when tested for use at worn on the body, as described in this user guide, is 1.46 W/kg (Bodyworn measurements differ among devices, depending upon available enhancements and FCC requirements.) While there may be differences between the SAR levels of various devices and at various positions, they all meet the government requirement. The FCC has granted an Equipment Authorization for this device with all reported SAR levels evaluated as in compliance with the FCC RF exposure guidelines. SAR information on this device is on file with the FCC and can be found under the Display Grant section of http://www.fcc.gov/oet/fccid after searching on FCC ID：2AG97-WIZARPOSQ2.

For body worn operation, this device has been tested and meets the FCC RF exposure guidelines for use with an accessory that contains no metal and the positions the handset a minimum of 0 cm from the body

Use of other enhancements may not ensure compliance with FCC RF exposure guidelines. If you do not use a body-worn accessory, position the handset a minimum of 0 cm from your body ,when the device is switched on at its highest certified power level in all tested frequency bands.

For handheld operating condition, SAR meets with FCC limit 4.0W/kg.

Trouble	Trouble shooting
Cannot connect the mobile network	◆Check whether the function of "data" is open. ◆Check whether the APN is correct. ◆Check whether the data service of SIM is active.
Paper jam	◆Reload the paper roll, or check if there is crease on paper roll. ◆Check if the cover of printer is closed. ◆Check whether the slot is blocked by the paper of last transaction record. ◆Check if the print shaft is missing.
Display unstable	◆The display may be interfered by instability voltage when charging, please disconnect the plug.
No response	◆Restart the APP or operation system.
Operation very slow	◆Please stop active APPs witch are not necessary.

Product warranty policy

WizarPOS provide after-sales service according to relative laws. Please read the following warranty terms.

1. Warranty period: one year for POS and charger, and 6 months for battery cell.
2. In warranty period, wizarPOS provide free repair/replace service, if the product has non artificial product failures.
3. Welcome to call our service hotline when you needed.
4. Please show product warranty card with true information.

Warranty limitation clause

Situations due to following reasons are not covered under warranty policies. While we can provide charge service.

1. Without our permission, the POS is unauthorized maintenance by user.
2. The OS of POS is unauthorized changed by user.
3. The trouble is caused by the third party APP which is installed by user.
4. Damage due to improper use which like falling, squeeze, hit, soaking, burning…
5. No warranty card, or cannot provide true information in card.
6. Expiry of guarantee period.
7. Exist other reason which is forbidden by laws.

Description of environmental protection

List of harmful substances in the product and logo of environment-friendly use period.

10	This is environment-friendly use period logo of the product. This logo means that in this period the product will not leak harmful substances in normal usage.

Part	Harmful substances					
	Pb	Hg	Cd	Cr(VI)	PBB	PBDE
LCD and TP Module	○	○	○	○	○	○
Housing and keypad	○	○	○	○	○	○
PCBA and components	×	○	○	○	○	○
Accessories	×	○	○	○	○	○

This table is made according to requirement of SJ/T 11364.

○ means the harmful substance concentration in the parts is under the limits in GB/T 26572.

× means the harmful substance concentration of one or more homogeneous materials in the parts is exceeded the limits in GB/T 26572.

NOTE: Parts which marked × are compliant to China RoHS Regulation and EU RoHS Directive.

Repair date	Repair content

After-Sale Service Hotline: 400-608-2601

For more information, please log on to the company's official website http://www.wizarpos.com