TEST REPORT

Applicant	Xiaomi Communications Co., Ltd.
Address	The Rainbow City of China Resources, NO.68, Qinghe Middle Street, Haidian District, Beijing, China

Manufacturer or Supplier	Xiaomi Communications Co., Ltd.
Address	The Rainbow City of China Resources, NO.68, Qinghe Middle Street, Haidian District, Beijing, China
Product Name	Mobile Phone
Brand Name	Redmi
Model	M1908C3XG
Additional Model & Model Difference	N/A
FCC ID	2AFZZC3XG
Date of tests	Aug. 28, 2019 ~ Sep. 24, 2019

the tests have been carried out according to the requirements of the following standard:

☒ **FCC Part 15, Subpart E, Section 15.407**
FCC 06-96
KDB 905462 D02 UNII DFS Compliance Procedures New Rules v02
KDB 905462 D03 UNII Clients Without Radar Detection New Rules v01r02

CONCLUSION: The submitted sample was found to COMPLY with the test requirement

Tested by Andy Zhu Project Engineer / EMC Department	Approved by Glyn He Assistant Manager / EMC Department
	Date: Sep. 26, 2019

This report is governed by, and incorporates by reference, CPS Conditions of Service as posted at the date of issuance of this report at http://www.bureauveritas.com/home/about-us/our-business/cps/about-us/terms-conditions/and is intended for your exclusive use. Any copying or replication of this report to or for any other person or entity, or use of our name or trademark, is permitted only with our prior written permission. This report sets forth our findings solely with respect to the test samples identified herein. The results set forth in this report are not indicative or representative of the quality or characteristics of the lot from which a test sample was taken or any similar or identical product unless specifically and expressly noted. Our report includes all of the tests requested by you and the results thereof based upon the information that you provided to us. Measurement uncertainty is only provided upon request for accredited tests. You have 60 days from date of issuance of this report to notify us of any material error or omission caused by our negligence or if you require measurement uncertainty; provided, however, that such notice shall be in writing and shall specifically address the issue you wish to raise. A failure to raise such issue within the prescribed time shall constitute you unqualified acceptance of the completeness of this report, the tests conducted and the correctness of the report contents.

TABLE OF CONTENTS

RELEASE CONTROL RECORD 3

1 EUT INFORMATION 4

1.1 OPERATING FREQUENCY BANDS AND MODE OF EUT 4

1.2 EUT SOFTWARE AND FIRMWARE VERSION 4

1.3 DESCRIPTION OF AVAILABLE ANTENNAS TO THE EUT 4

1.4 TRANSMIT POWER CONTROL (TPC) 5

1.5 STATEMENT OF MAUNFACTURER 5

2 U-NII DFS RULE REQUIREMENTS 6

2.1 WORKING MODES AND REQUIRED TEST ITEMS 6

2.2 TEST LIMITS AND RADAR SIGNAL PARAMETERS 7

3 TEST & SUPPORT EQUIPMENT LIST 10

3.1 TEST INSTRUMENTS 10

3.2 DESCRIPTION OF SUPPORT UNITS 10

4 TEST PROCEDURE 11

4.1 BVADT DFS MEASUREMENT SYSTEM: 11

4.2 CALIBRATION OF DFS DETECTION THRESHOLD LEVEL: 12

4.3 DEVIATION FROM TEST STANDARD 13

4.4 CONDUCTED TEST SETUP CONFIGURATION 13

4.4.1 CLIENT WITHOUT RADAR DETECTION MODE 13

5 TEST RESULTS 14

5.1 SUMMARY OF TEST RESULTS 14

5.2 DETAILED TEST RESULTS 14

5.2.1 TEST MODE: DEVICE OPERATING IN CLIENT WITHOUT RADAR DETECTION MODE 14

5.2.2 DFS DETECTION THRESHOLD 15

5.2.3 CHANNEL LOADING 16

5.2.4 CHANNEL CLOSING TRANSMISSION AND CHANNEL MOVE TIME 17

5.2.5 NON- OCCUPANCY PERIOD 18

5.2.6 NON-ASSOCIATED TEST 20

5.2.7 NON- CO-CHANNEL TEST 20

6 APPENDIX A - MODIFICATIONS RECORDERS FOR ENGINEERING CHANGES TO THE EUT BY THE LAB 21

RELEASE CONTROL RECORD

ISSUE NO.	REASON FOR CHANGE	DATE ISSUED
RF190828N005-1	Original release.	Sep. 26, 2019

Bureau Veritas Shenzhen Co., Ltd.
Dongguan Branch

No. 34, Chenwulu Section, Guantai Rd., Houjie Town, Dongguan City,
Guangdong 523942, China

Tel: +86 769 8998 2098
Fax: +86 769 8593 1080
Email: customerservice.dg@cn.bureauveritas.com

1 EUT INFORMATION

1.1 OPERATING FREQUENCY BANDS AND MODE OF EUT

OPERATING FREQUENCY BANDS AND MODE OF EUT

OPERATIONAL MODE	OPERATING FREQUENCY RANGE	
	5250~5350MHz	5470~5725MHz
Client without radar detection and ad hoc function	V	V

1.2 EUT SOFTWARE AND FIRMWARE VERSION

THE EUT SOFTWARE/FIRMWARE VERSION

NO.	PRODUCT	MODEL NO.	SOFTWARE/FIRMWARE VERSION
1	Mobile Phone	M1908C3XG	MIUI 10/P2

1.3 DESCRIPTION OF AVAILABLE ANTENNAS TO THE EUT

ANTENNA LIST

ANT.	BRAND	MODEL	CONNECTOR TYPE	ANT TYPE	FREQUENCY RANGE (MHZ TO MHZ)	NET GAIN(dBi)	CABLE LOSS(dBi)
1	N/A	N/A	N/A	Fixed Internal Antenna	5250 - 5350	-2	0
					5470 - 5725	-1.14	0

1.4 TRANSMIT POWER CONTROL (TPC)

U-NII devices operating in the 5.25-5.35 GHz band and the 5.47-5.725 GHz band shall employ a TPC mechanism. The U-NII device is required to have the capability to operate at least 6 dB below the mean EIRP value of 30 dBm. A TPC mechanism is not required for systems with an EIRP of less than 500 mW.

Maximum EIRP of this device is less than 500mW which less than 500mW, therefore it's not require TPC function.

1.5 STATEMENT OF MAUNFACTURER

This device (Client) is without radar detection, then the manufacturer statement confirming that information regarding the parameters of the detected Radar Waveforms is not available to the end user. And the device doesn't have Ad Hoc mode on DFS frequency band.

2 U-NII DFS RULE REQUIREMENTS

2.1 WORKING MODES AND REQUIRED TEST ITEMS

The manufacturer shall state whether the UUT is capable of operating as a Master and/or a Client. If the UUT is capable of operating in more than one operating mode then each operating mode shall be tested separately. See the applicability of DFS requirements for each of the operational modes.

APPLICABILITY OF DFS REQUIREMENTS PRIOR TO USE A CHANNEL

REQUIREMENT	OPERATIONAL MODE		
	MASTER	CLIENT WITHOUT RADAR DETECTION	CLIENT WITH RADAR DETECTION
Non-Occupancy Period	✓	✓	✓
DFS Detection Threshold	✓	Not required	✓
Channel Availability Check Time	✓	Not required	Not required
Uniform Spreading	✓	Not required	Not required
U-NII Detection Bandwidth	✓	Not required	✓

APPLICABILITY OF DFS REQUIREMENTS DURING NORMAL OPERATION

REQUIREMENT	OPERATIONAL MODE		
	MASTER	CLIENT WITHOUT RADAR DETECTION	CLIENT WITH RADAR DETECTION
DFS Detection Threshold	✓	Not required	✓
Channel Closing Transmission Time	✓	✓	✓
Channel Move Time	✓	✓	✓
U-NII Detection Bandwidth	✓	Not required	✓

2.2 TEST LIMITS AND RADAR SIGNAL PARAMETERS

DETECTION THRESHOLD VALUES

DFS DETECTION THRESHOLDS FOR MASTER DEVICES AND CLIENT DEVICES WITH RADAR DETECTION

MAXIMUM TRANSMIT POWER	VALUE (SEE Note 1 and 2)
≥ 200 milliwatt	-64 dBm
< 200 milliwatt	-62 dBm

Note 1: This is the level at the input of the receiver assuming a 0 dBi receive antenna.

Note 2: Throughout these test procedures an additional 1 dB has been added to the amplitude of the test transmission waveforms to account for variations in measurement equipment. This will ensure that the test signal is at or above the detection threshold level to trigger a DFS response.

DFS RESPONSE REQUIREMENT VALUES

PARAMETER	VALUE
Non-occupancy period	Minimum 30 minutes
Channel Availability Check Time	60 seconds
Channel Move Time	10 seconds See Note 1.
Channel Closing Transmission Time	200 milliseconds + an aggregate of 60 milliseconds over remaining 10 second period. See Notes 1 and 2.
U-NII Detection Bandwidth	100% of the UNII transmission power bandwidth. See Note 3.

Note 1: The instant that the Channel Move Time and the Channel Closing Transmission Time begins is as follows:

• For the Short Pulse Radar Test Signals this instant is the end of the Burst.

• For the Frequency Hopping radar Test Signal, this instant is the end of the last radar Burst generated.

• For the Long Pulse Radar Test Signal this instant is the end of the 12 second period defining the Radar Waveform.

Note 2: The Channel Closing Transmission Time is comprised of 200 milliseconds starting at the beginning of the Channel Move Time plus any additional intermittent control signals required to facilitate a Channel move (an aggregate of 60 milliseconds) during the remainder of the 10 second period. The aggregate duration of control signals will not count quiet periods in between transmissions.

Note 3: During the U-NII Detection Bandwidth detection test, radar type 1 is used and for each frequency step the minimum percentage of detection is 90 percent. Measurements are performed with no data traffic.

PARAMETERS OF DFS TEST SIGNALS

Step intervals of 0.1 microsecond for Pulse Width, 1 microsecond for PRI, 1 MHz for chirp width and 1 for the number of pulses will be utilized for the random determination of specific test waveforms.

Short Pulse Radar Test Waveforms

Radar Type	Pulse Width (µsec)	PRI (µsec)	Number of Pulses	Minimum Percentage of Successful Detection	Minimum Number of Trials
0	1	1428	18	See Note 1	See Note 1
1	1	Test A: 15 unique PRI values randomly selected from the list of 23 PRI values in Table 5a ---------- Test B: 15 unique PRI values randomly selected within the range of 518-3066 µsec, with a minimum increment of 1 µsec, excluding PRI values selected in Test A	$\mathrm{Roundup}\left\{\left(\frac{1}{360}\right)\cdot\left(\frac{19\cdot 10^6}{\mathrm{PRI}_{\mu sec}}\right)\right\}$	60%	30
2	1-5	150-230	23-29	60%	30
3	6-10	200-500	16-18	60%	30
4	11-20	200-500	12-16	60%	30
Aggregate (Radar Types 1-4)				80%	120
Note 1: Short Pulse Radar Type 0 should be used for the detection bandwidth test, channel move time, and channel closing time tests.					

LONG PULSE RADAR TEST WAVEFORM

RADAR TYPE	PULSE WIDTH (µsec)	CHIRP WIDTH (MHz)	PRI (µsec)	NUMBER OF PULSES PER BURST	NUMBER OF BURSTS	MINIMUM PERCENTAGE OF SUCCESSFUL DETECTION	MINIMUM NUMBER OF TRIALS
5	50-100	5-20	1000-2000	1-3	8-20	80%	30

FREQUENCY HOPPING RADAR TEST WAVEFORM

RADAR TYPE	PULSE WIDTH (µsec)	PRI (µsec)	PULSES PER HOP	HOPPING RATE (kHz)	HOPPING SEQUENCE LENGTH (msec)	MINIMUM PERCENTAGE OF SUCCESSFUL DETECTION	MINIMUM NUMBER OF TRIALS
6	1	333	9	0.333	300	70%	30

3 TEST & SUPPORT EQUIPMENT LIST

3.1 TEST INSTRUMENTS

TEST INSTRUMENTS LIST.

DESCRIPTION & MANUFACTURER	MODEL NO.	BRAND	CALIBRATED DATE	CALIBRATED UNTIL
Spectrum Analyzer	N9020A	MY55400499	Mar. 21,19	Mar. 20,20
R&S Spectrum	FSV7	R&S	Nov 25, 18	Nov 24, 19
MXG-B RF Vector Signal Generator	N5182B	MY56200288	Jan. 02,19	Jan. 01,20
Signal generator	8645A	Agilent	Sep.01, 19	Aug.31, 20

3.2 DESCRIPTION OF SUPPORT UNITS

SUPPORT UNIT INFORMATION.

NO.	PRODUCT	BRAND	MODEL NO.	FCC ID	SOFTWARE/FIRMWARE VERSION
1	Router AC3200	LINKSYS	WRT-3200ACM	Q87-WRT3200ACM	1.0.0.174361

NOTE: This device was functioned as a ☒Master ☐Slave device during the DFS test.

4 TEST PROCEDURE

4.1 BVADT DFS MEASUREMENT SYSTEM:

A complete DFS Measurement System consists of Radar signal generate system to generating the radar waveforms. The traffic monitoring system is specified to the type of unit under test (UUT).

Conducted setup configuration of DFS Measurement System

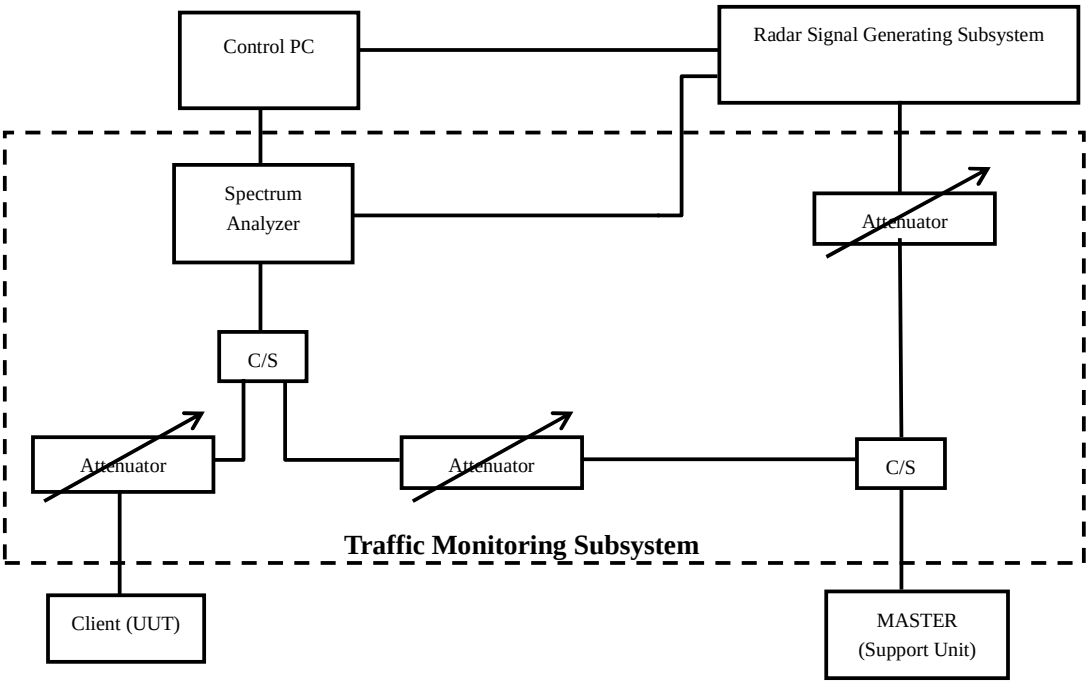

Channel Loading

System testing will be performed with channel-loading using means appropriate to the data types that are used by the unlicensed device. The following requirements apply:

a)	The data file must be of a type that is typical for the device (i.e., MPEG-2, MPEG-4, WAV, MP3, MP4, AVI, etc.) and must generally be transmitting in a streaming mode.	
b)	Software to ping the client is permitted to simulate data transfer but must have random ping intervals.	
c)	Timing plots are required with calculations demonstrating a minimum channel loading of approximately 17% or greater.	✓
d)	Unicast or Multicast protocols are preferable but other protocols may be used. The appropriate protocol used must be described in the test procedures.	

4.2 CALIBRATION OF DFS DETECTION THRESHOLD LEVEL:

The measured channel are 5300MHz and 5500 MHz in 20MHz Bandwidth, 5290MHz and 5530MHz in 80MHz Bandwidth. The radar signal was the same as transmitted channels, and injected into the antenna port of AP (master) or Client Device with Radar Detection, measured the channel closing transmission time and channel move time. The Master maximum transmit power was more than 200mW. The Master antenna gain is 3dBi and required detection threshold is -61dBm (=-64+3)dBm.

Conducted setup configuration of calibration of DFS detection threshold level:

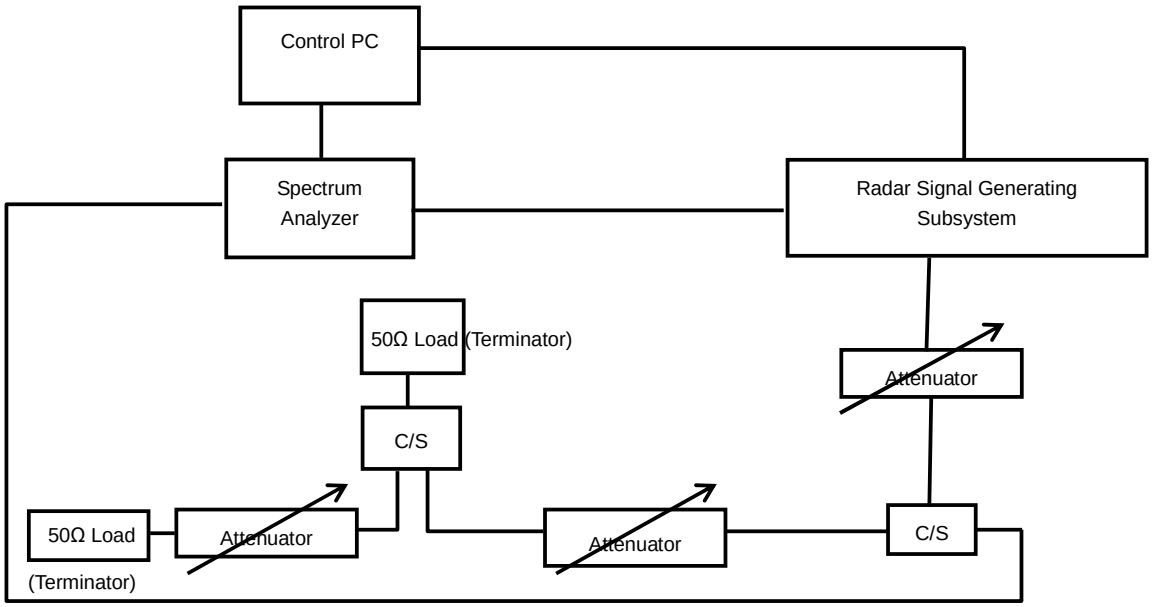

4.3 DEVIATION FROM TEST STANDARD

No deviation.

4.4 CONDUCTED TEST SETUP CONFIGURATION

4.4.1 CLIENT WITHOUT RADAR DETECTION MODE

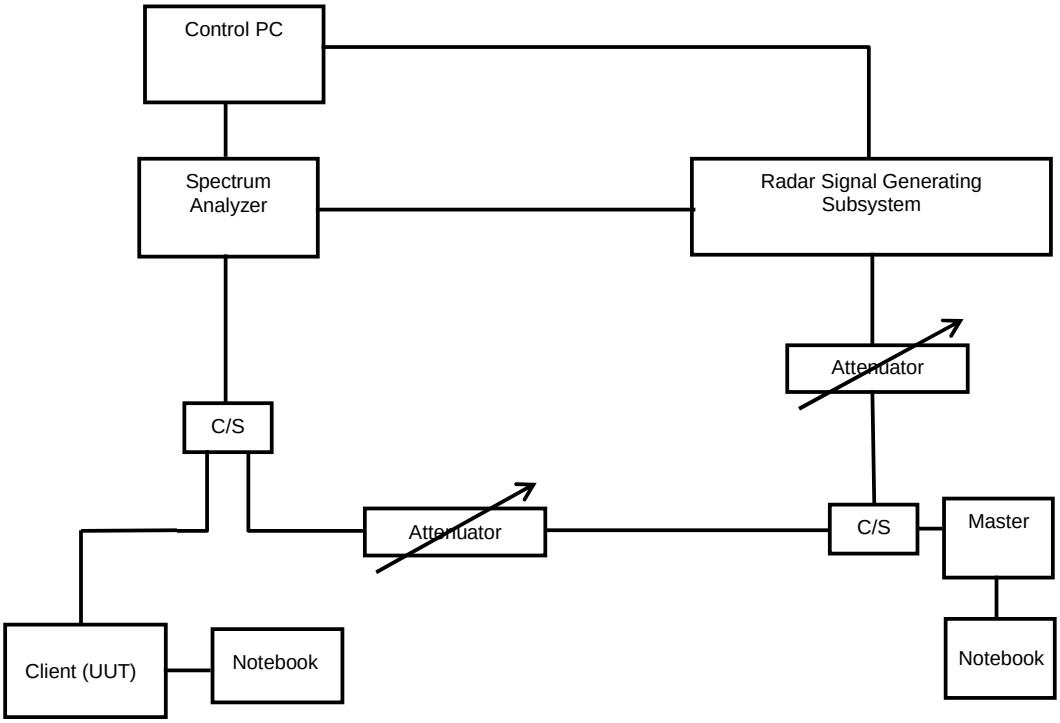

The UUT is a U-NII Device operating in Client mode without radar detection. The radar test signals are injected into the Master Device.

5 TEST RESULTS

5.1 SUMMARY OF TEST RESULTS

CLAUSE	TEST PARAMETER	REMARKS	PASS/FAIL
15.407	DFS Detection Threshold	Not Applicable	N/A
15.407	Channel Availability Check Time	Not Applicable	N/A
15.407	Channel Move Time	Applicable	Pass
15.407	Channel Closing Transmission Time	Applicable	Pass
15.407	Non- Occupancy Period	Applicable	Pass
15.407	Uniform Spreading	Not Applicable	N/A
15.407	U-NII Detection Bandwidth	Not Applicable	N/A
15.407	Non-associated test	Applicable	Pass
15.407	Non-Co-Channel test	Applicable	Pass

Note: Therefore test procedure were completed by KDB 905462

5.2 DETAILED TEST RESULTS

5.2.1 TEST MODE: DEVICE OPERATING IN CLIENT WITHOUT RADAR DETECTION MODE

The radar test signals are injected into the Master Device.
This test was investigated for different bandwidth (20MHz, 40MHz and 80MHz). The following plots was done on 80MHz as a representative

5.2.2 DFS DETECTION THRESHOLD

The Required detection threshold is -61.00dBm = -64 +3dBi. The conducted radar burst level is set to -61.21dBm.

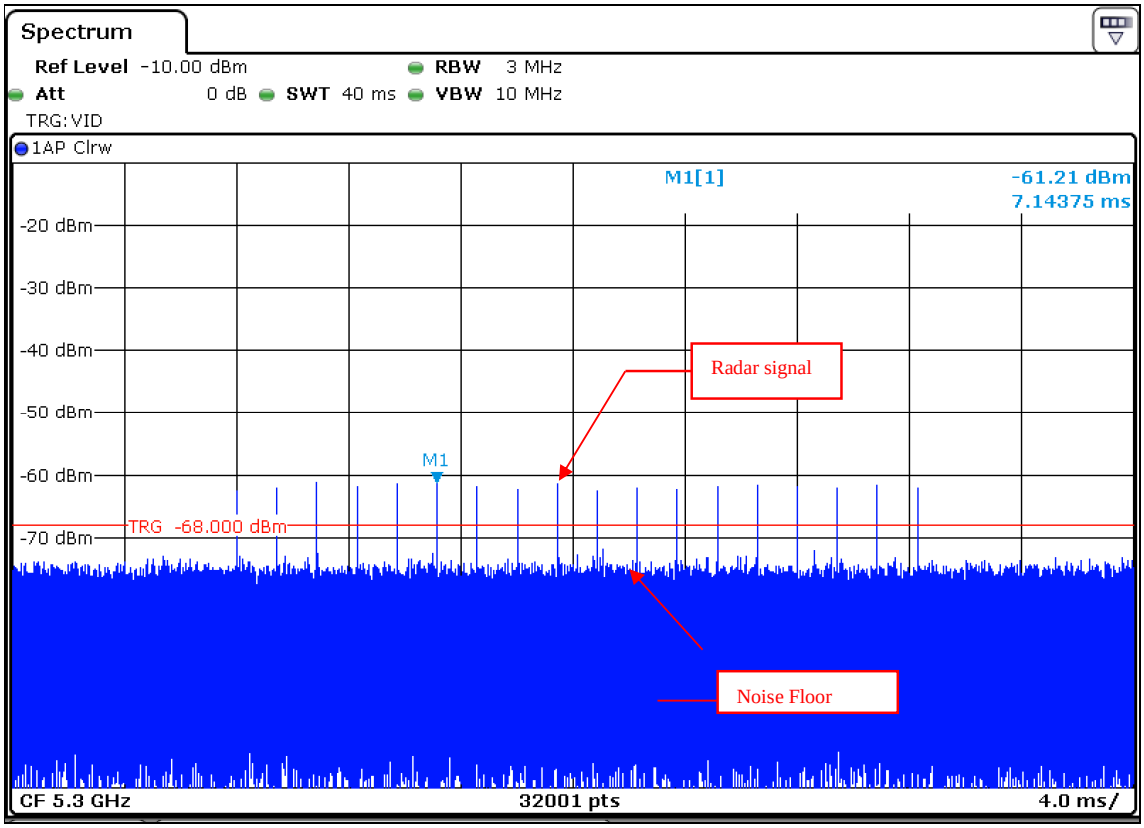

Radar Signal (Type 0)

5.2.3 CHANNEL LOADING

The measured channel are 5300MHz and 5500 MHz in 20MHz Bandwidth, 5290MHz and 5530MHz in 80MHz Bandwidth. The radar signal was the same as transmitted channels, and injected into the antenna port of AP (master) with radar signal, measured the channel shutdown. The slave transmitted the test data to master, the transmitted duty cycle is 18.325%.

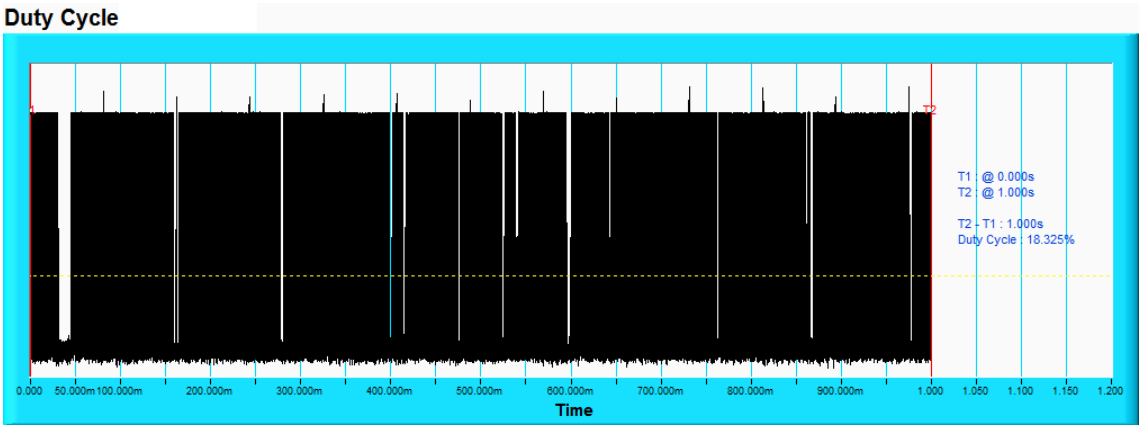

NOTE: T1 denotes the start of duty cycle period is 0th second. T2 denotes the end of duty cycle period is 1th second. T2 – T1= 1 seconds. Duty Cycle = 18.325%.

Note: Traffic signal: from slave transmit to master.

5.2.4 CHANNEL CLOSING TRANSMISSION AND CHANNEL MOVE TIME

Radar Signal 0

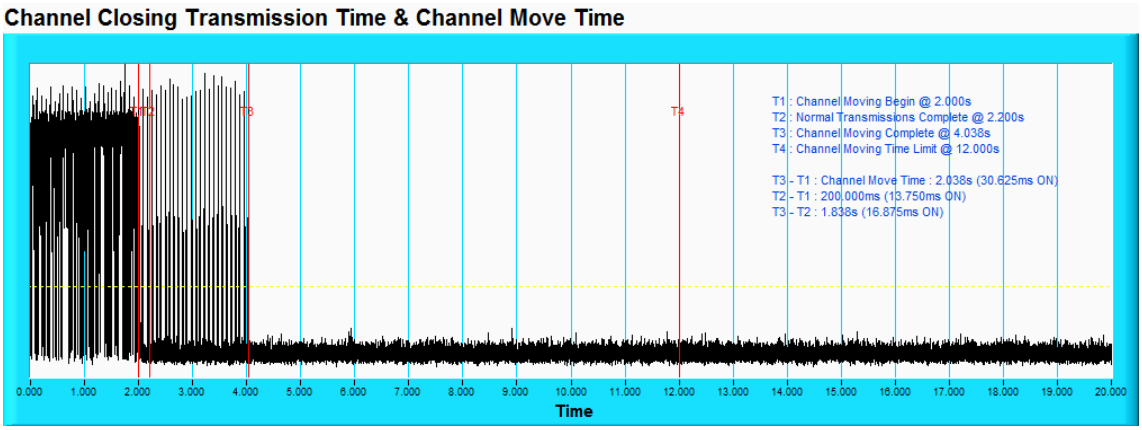

NOTE: T1 denotes the start of Channel Move Time upon the end of the last Radar burst. T2 denotes the data transmission time of 200ms from T1. T3 denotes the end of Channel Move Time. T4 denotes the 10 second from T1 to observe the aggregate duration of transmissions.

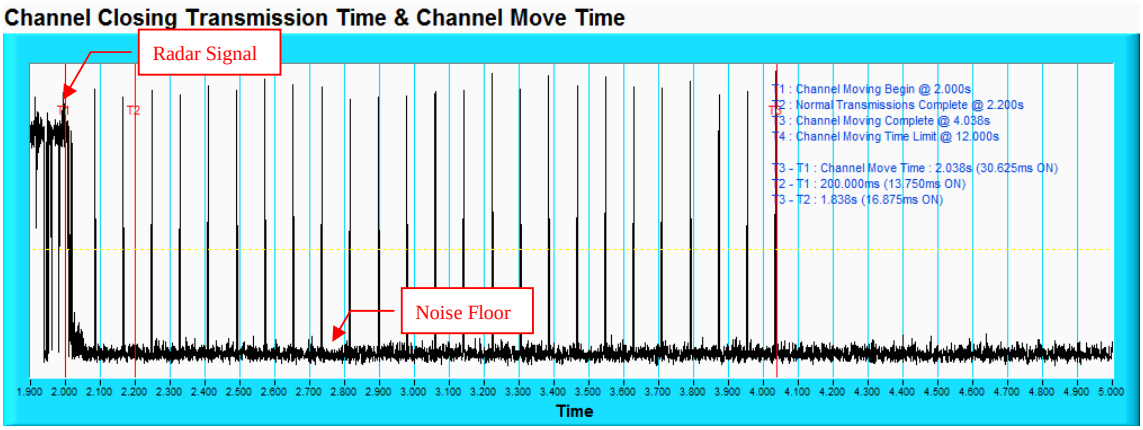

NOTE: Zoom in of the first 3000ms after radar signal applied.

5.2.5 NON- OCCUPANCY PERIOD

ASSOCIATED TEST

1) Test results demonstrating an associated client link is established with the master on a test frequency.

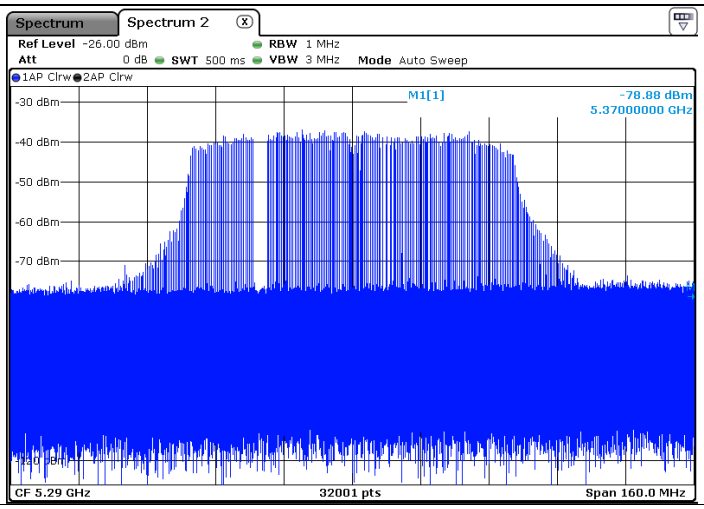

EUT (Client) links with master on 5290MHz

2) The client and DFS-certified master device are associated, and system testing will be performed with channel-loading for a non-occupancy period test.

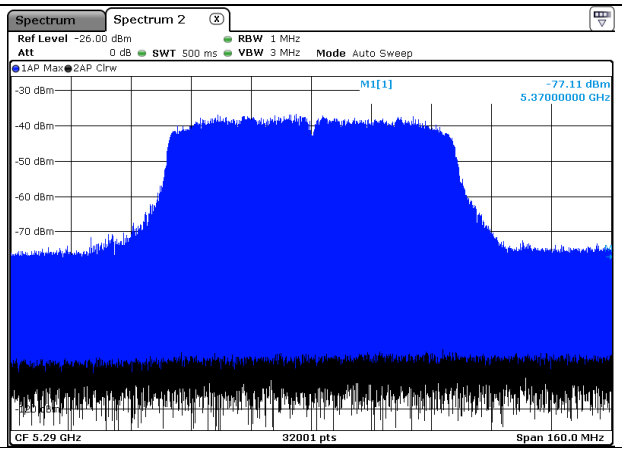

Client performed with channel-loading via master.

3). The device transmits one type of radar as specified in the DFS Order.

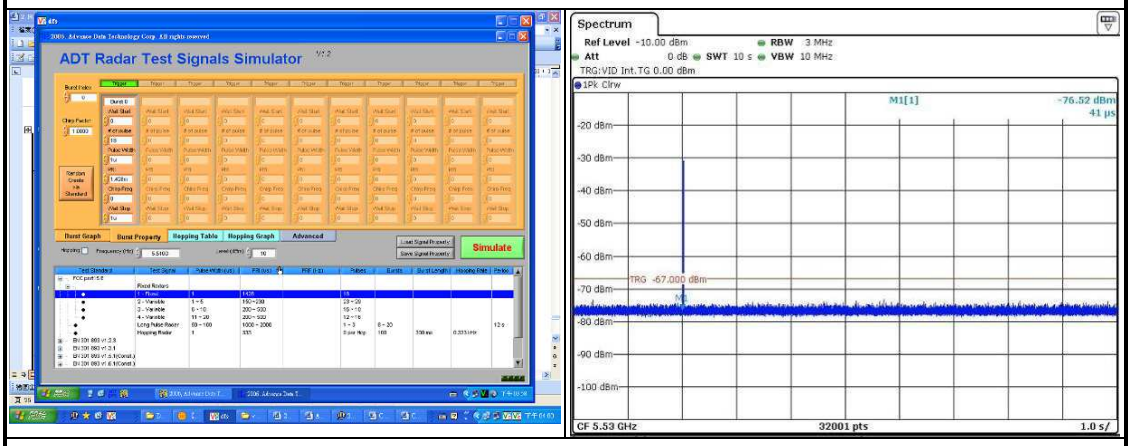

Radar Signal (Type 0) is used to test during DFS testing.

4) The test frequency has been monitored to ensure no transmission of any type has occurred for 30 minutes;

Note: If the client moves with the master, the device is considered compliant if nothing appears in the client non-occupancy period test. For devices that shut down (rather than moving channels), no beacons should appear;

5)An analyzer plot that contains a single 30-minute sweep on the original test frequency.

Non - Occupancy Period

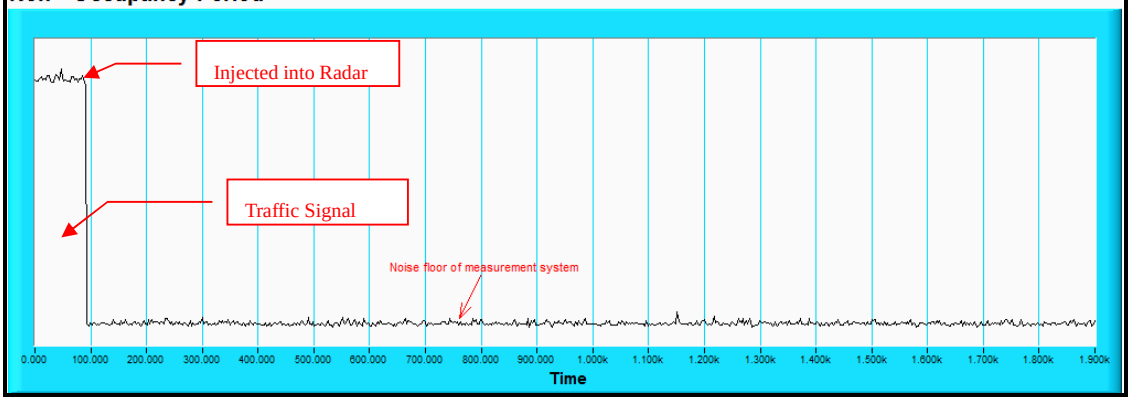

5.2.6 NON-ASSOCIATED TEST

Master was off.

During the 30 minutes observation time, The UUT did not make any transmissions in the DFS band after UUT power up.

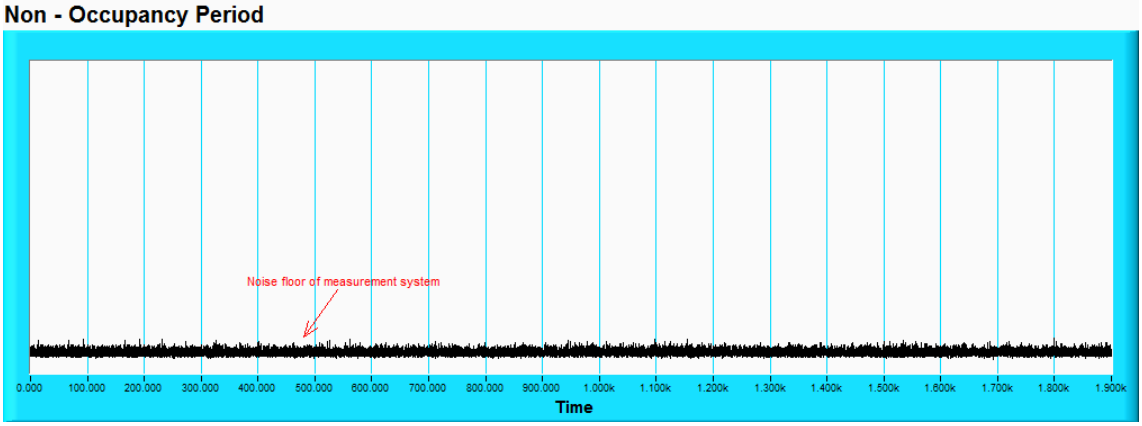

5.2.7 NON- CO-CHANNEL TEST

The UUT was investigated after radar was detected the channel and made sure no co-channel operation with radars.

6 APPENDIX A - Modifications recorders for engineering changes to the EUT BY THE LAB

No any modifications are made to the EUT by the lab during the test.

---END---