FCC SAR Test Report

APPLICANT	: Solnik S.A.
EQUIPMENT	: Smart phone
BRAND NAME	: HYUNDAI
MODEL NAME	: HY2-6275AZ
FCC ID	: 2AFRUHY26275AZ
STANDARD	: FCC 47 CFR Part 2 (2.1093) ANSI/IEEE C95.1-1992 IEEE 1528-2013

We, SPORTON INTERNATIONAL INC., would like to declare that the tested sample has been evaluated in accordance with the procedures and had been in compliance with the applicable technical standards.

The test results in this report apply exclusively to the tested model / sample. Without written approval of SPORTON INTERNATIONAL INC., the test report shall not be reproduced except in full.

Reviewed by: Eric Huang / Deputy Manager

Approved by: Jones Tsai / Manager

SPORTON INTERNATIONAL INC.
No.52, Hwa Ya 1st Rd., Hwa Ya Technology Park, Kwei-Shan District, Taoyuan City, Taiwan (R.O.C.)

Table of Contents

1. Statement of Compliance **4**
2. Administration Data **5**
3. Guidance Standard **5**
4. Equipment Under Test (EUT) **6**
4.1 General Information 6
4.2 Maximum Tune-up Limit 7
4.3 General LTE SAR Test and Reporting Considerations 10
5. RF Exposure Limits **11**
5.1 Uncontrolled Environment 11
5.2 Controlled Environment 11
6. Specific Absorption Rate (SAR) **12**
6.1 Introduction 12
6.2 SAR Definition 12
7. System Description and Setup **13**
8. Measurement Procedures **14**
8.1 Spatial Peak SAR Evaluation 14
8.2 Power Reference Measurement 15
8.3 Area Scan 15
8.4 Zoom Scan 16
8.5 Volume Scan Procedures 16
8.6 Power Drift Monitoring 16
9. Test Equipment List **17**
10. System Verification **18**
10.1 Tissue Verification 18
10.2 System Performance Check Results 19
11. RF Exposure Positions **20**
11.1 Ear and handset reference point 20
11.2 Definition of the cheek position 21
11.3 Definition of the tilt position 22
11.4 Body Worn Accessory 23
11.5 Wireless Router 23
12. Conducted RF Output Power (Unit: dBm) **24**
13. Antenna Location **38**
14. SAR Test Results **39**
14.1 Head SAR 40
14.2 Hotspot SAR 43
14.3 Body Worn Accessory SAR 48
14.4 Repeated SAR Measurement 50
15. Simultaneous Transmission Analysis **51**
15.1 Head Exposure Conditions 52
15.2 Hotspot Exposure Conditions 54
15.3 Body-Worn Accessory Exposure Conditions 58
16. Uncertainty Assessment **60**
17. References **62**
Appendix A. Plots of System Performance Check
Appendix B. Plots of High SAR Measurement
Appendix C. DASY Calibration Certificate
Appendix D. Test Setup Photos

Revision History

REPORT NO.	VERSION	DESCRIPTION	ISSUED DATE
FA531002-01	Rev. 01	This is a variant product of BLU STUDIO MINI LTE 2, the new FCC application change the application, brand name, model name, FCC ID and has been authorized to re-use the test data by original application. The test result is not affected, all test cases were performed on original report which can be referred to Sporton report number FA531002 (Model name: BLU STUDIO MINI LTE 2; FCC ID: YHLBLUSTMNLTE2).	Nov. 10, 2015

1. Statement of Compliance

The maximum results of Specific Absorption Rate (SAR) found during testing for **Solnik S.A., Smart phone, HY2-6275AZ** are as follows.

Equipment Class	Frequency Band	Highest SAR Summary			
		Head (Separation 0mm) 1g SAR (W/kg)	Body-worn (Separation 10mm) 1g SAR (W/kg)	Wireless Router (Separation 10mm) 1g SAR (W/kg)	Highest Simultaneous Transmission 1g SAR (W/kg)
PCE	GSM850	**0.61**	1.11	1.11	1.38
	GSM1900	0.20	0.90	0.90	
	WCDMA Band V	0.30	0.53	0.53	
	WCDMA Band IV	0.35	1.26	1.24	
	WCDMA Band II	0.33	1.26	1.26	
	LTE Band 17	0.25	0.22	0.22	
	LTE Band 4	0.33	0.90	1.05	
	LTE Band 7	0.25	**1.31**	**1.31**	
DTS	WLAN 2.4GHz Band	0.11	<0.10	<0.10	1.38
DSS	Bluetooth	<0.10	<0.10	<0.10	1.35
Date of Testing:		May 16, 2015 ~ May 21, 2015			

This device is in compliance with Specific Absorption Rate (SAR) for general population/uncontrolled exposure limits (1.6 W/kg) specified in FCC 47 CFR part 2 (2.1093) and ANSI/IEEE C95.1-1992, and had been tested in accordance with the measurement methods and procedures specified in IEEE 1528-2013 and FCC KDB publications.

2. Administration Data

Testing Laboratory	
Test Site	SPORTON INTERNATIONAL INC.
Test Site Location	No.52, Hwa Ya 1st Rd., Hwa Ya Technology Park, Kwei-Shan District, Taoyuan City, Taiwan (R.O.C.) TEL: +886-3-327-3456 FAX: +886-3-328-4978

Applicant	
Company Name	Solnik S.A.
Address	Unit 01, 15/F, Seaview Centre, 139-141 Hoi bun road, Kwun Tong, Kowloon, Hongkong

Manufacturer	
Company Name	Beijing Benywave Wireless Communication Co. Ltd.
Address	No 55, Jiachuang second road, Zhongguancun science Park OPTO－Mechatronics Industrial Park, Tongzhou District, Beijing, China 101111

3. Guidance Standard

The Specific Absorption Rate (SAR) testing specification, method, and procedure for this device is in accordance with the following standards:

- FCC 47 CFR Part 2 (2.1093)
- ANSI/IEEE C95.1-1992
- IEEE 1528-2013
- FCC KDB 865664 D01 SAR Measurement 100 MHz to 6 GHz v01r04
- FCC KDB 865664 D02 SAR Reporting v01r02
- FCC KDB 447498 D01 General RF Exposure Guidance v06
- FCC KDB 648474 D04 SAR Evaluation Considerations for Wireless Handsets v01r03
- FCC KDB 248227 D01 802.11 Wi-Fi SAR v02r02
- FCC KDB 941225 D01 3G SAR Procedures v03r01
- FCC KDB 941225 D05 SAR for LTE Devices v02r04
- FCC KDB 941225 D06 Hotspot Mode SAR v02r01

4. Equipment Under Test (EUT)

4.1 General Information

Product Feature & Specification	
Equipment Name	Smart phone
Brand Name	HYUNDAI
Model Name	HY2-6275AZ
FCC ID	2AFRUHY26275AZ
IMEI Code	SIM1: 354033028148032 SIM2: 354033028148040
Wireless Technology and Frequency Range	GSM850: 824.2 MHz ~ 848.8 MHz GSM1900: 1850.2 MHz ~ 1909.8 MHz WCDMA Band V: 826.4 MHz ~ 846.6 MHz WCDMA Band IV: 1712.4 MHz ~ 1752.6 MHz WCDMA Band II: 1852.4 MHz ~ 1907.6 MHz LTE Band 17: 706.5 MHz ~ 713.5 MHz LTE Band 4: 1710.7 MHz ~ 1754.3 MHz LTE Band 7: 2502.5 MHz ~ 2567.5 MHz WLAN 2.4GHz Band: 2412 MHz ~ 2462 MHz Bluetooth: 2402 MHz ~ 2480 MHz
Mode	•GSM/GPRS/EGPRS •RMC/AMR 12.2Kbps •HSDPA •HSUPA •LTE: QPSK, 16QAM •802.11b/g/n HT20 •Bluetooth v3.0+EDR, Bluetooth v4.0 LE
HW Version	TBW5726_P1.1_002
SW Version	572614_9823_V009010
GSM / (E)GPRS Transfer mode	Class B – EUT cannot support Packet Switched and Circuit Switched Network simultaneously but can automatically switch between Packet and Circuit Switched Network.
EUT Stage	Pre-Production

Remark:

1. This device 2.4GHz supports hotspot operation and 802.11n-HT40 is not supported in 2.4GHz WLAN.
2. The EUT do not support DTM function.
3. This device supported VoIP in GPRS, EGPRS, WCDMA and LTE (e.g. 3rd party VoIP).
4. This device supports GRPS/EGPRS mode up to multi-slot class 12.
5. This device has 2 SIM slots and supports dual SIM dual Standby. SIM 1supports GSM/WCDMA/LTE and SIM 2 supports GSM/WCDMA only. The WWAN radio transmission will be enabled by either one SIM at a time (Single active).

4.2 Maximum Tune-up Limit

Mode	Burst average power(dBm)	
	GSM 850	GSM 1900
GSM (GMSK, 1 Tx slot)	33.5	30.5
GPRS (GMSK, 1 Tx slot)	33.5	30.5
GPRS (GMSK, 2 Tx slots)	30.5	29.0
GPRS (GMSK, 3 Tx slots)	29.0	27.0
GPRS (GMSK, 4 Tx slots)	28.0	25.0
EDGE (8PSK, 1 Tx slot)	27.5	25.0
EDGE (8PSK, 2 Tx slots)	26.5	24.5
EDGE (8PSK, 3 Tx slots)	25.5	23.5
EDGE (8PSK, 4 Tx slots)	24.5	22.5

Mode	Average power (dBm)		
	WCDMA Band V	WCDMA Band II	WCDMA Band IV
AMR 12.2Kbps	23.5	23.5	23.5
RMC 12.2Kbps	23.5	23.5	23.5
HSDPA Subtest-1	22.0	22.0	22.0
HSDPA Subtest-2	22.0	22.0	22.0
HSDPA Subtest-3	21.5	21.5	21.5
HSDPA Subtest-4	21.5	21.5	21.5
HSUPA Subtest-1	22.0	22.0	22.0
HSUPA Subtest-2	21.0	21.0	21.0
HSUPA Subtest-3	21.0	21.0	21.0
HSUPA Subtest-4	21.0	21.0	21.0
HSUPA Subtest-5	22.0	22.0	22.0

LTE Band 4				
Average Power (dBm)				
Modulation	BW (MHz)	RB size	MPR	Target Power
QPSK	20	≤ 18	0	23.0
QPSK	20	> 18	1	22.0
16QAM	20	≤ 18	1	22.0
16QAM	20	> 18	2	21.0
QPSK	15	≤ 16	0	23.0
QPSK	15	> 16	1	22.0
16QAM	15	≤ 16	1	22.0
16QAM	15	> 16	2	21.0
QPSK	10	≤ 12	0	23.0
QPSK	10	> 12	1	22.0
16QAM	10	≤ 12	1	22.0
16QAM	10	> 12	2	21.0
QPSK	5	≤ 8	0	23.0
QPSK	5	> 8	1	22.0
16QAM	5	≤ 8	1	22.0
16QAM	5	> 8	2	21.0
QPSK	3	≤ 4	0	23.0
QPSK	3	> 4	1	22.0
16QAM	3	≤ 4	1	22.0
16QAM	3	> 4	2	21.0
QPSK	1.4	≤ 5	0	23.0
QPSK	1.4	> 5	1	22.0
16QAM	1.4	≤ 5	1	22.0
16QAM	1.4	> 5	2	21.0

LTE Band 7				
Average Power (dBm)				
Modulation	BW (MHz)	RB size	MPR	Target Power
QPSK	20	≤ 18	0	22.0
QPSK	20	> 18	1	21.0
16QAM	20	≤ 18	1	21.0
16QAM	20	> 18	2	20.0
QPSK	15	≤ 16	0	22.0
QPSK	15	> 16	1	21.0
16QAM	15	≤ 16	1	21.0
16QAM	15	> 16	2	20.0
QPSK	10	≤ 12	0	22.0
QPSK	10	> 12	1	21.0
16QAM	10	≤ 12	1	21.0
16QAM	10	> 12	2	20.0
QPSK	5	≤ 8	0	22.0
QPSK	5	> 8	1	21.0
16QAM	5	≤ 8	1	21.0
16QAM	5	> 8	2	20.0

LTE Band 17				
Average Power (dBm)				
Modulation	BW (MHz)	RB size	MPR	Target Power
QPSK	10	≤ 12	0	22.5
QPSK	10	> 12	1	21.5
16QAM	10	≤ 12	1	21.5
16QAM	10	> 12	2	20.5
QPSK	5	≤ 8	0	22.5
QPSK	5	> 8	1	21.5
16QAM	5	≤ 8	1	21.5
16QAM	5	> 8	2	20.5

Mode			Maximum Average Power (dBm)
2.4GHz	802.11b	CH 1	10.0
		CH 6	13.0
		CH 11	10.0
	802.11g	CH 1	9.0
		CH 6	12.0
		CH 11	9.0
	802.11n-HT20	CH 1	9.0
		CH 6	12.0
		CH 11	9.0
Bluetooth v3.0+EDR	CH 0		10.0
	CH 39		10.0
	CH 78		9.5
Bluetooth v4.0 LE			1.0

4.3 General LTE SAR Test and Reporting Considerations

Summarized necessary items addressed in KDB 941225 D05 v02r03	
FCC ID	2AFRUHY26275AZ
Equipment Name	Smart phone
Operating Frequency Range of each LTE transmission band	LTE Band 17: 706.5 MHz ~ 713.5 MHz LTE Band 4: 1710.7 MHz ~ 1754.3 MHz LTE Band 7: 2502.5 MHz ~ 2567.5 MHz
Channel Bandwidth	1.4MHz, 3MHz, 5MHz, 10MHz, 15MHz, 20MHz (LTE Band4) 5MHz, 10MHz, 15MHz, 20MHz (LTE Band7) 5MHz, 10MHz (LTE Band17)
uplink modulations used	QPSK, and 16QAM
LTE Voice / Data requirements	Data only
LTE MPR permanently built-in by design	Table 6.2.3-1: Maximum Power Reduction (MPR) for Power Class 3

Modulation	Channel bandwidth / Transmission bandwidth (RB)						MPR (dB)
	1.4 MHz	3.0 MHz	5 MHz	10 MHz	15 MHz	20 MHz	
QPSK	> 5	> 4	> 8	> 12	> 16	> 18	≤ 1
16 QAM	≤ 5	≤ 4	≤ 8	≤ 12	≤ 16	≤ 18	≤ 1
16 QAM	> 5	> 4	> 8	> 12	> 16	> 18	≤ 2

LTE A-MPR	In the base station simulator configuration, Network Setting value is set to NS_01 to disable A-MPR during SAR testing and the LTE SAR tests was transmitting on all TTI frames (Maximum TTI)
LTE Release Version	R9
Spectrum plots for RB configuration	A properly configured base station simulator was used for the SAR and power measurement; therefore, spectrum plots for each RB allocation and offset configuration are not included in the SAR report.

Transmission (H, M, L) channel numbers and frequencies in each LTE band

LTE Band 17

	Bandwidth 5 MHz		Bandwidth 10 MHz	
	Channel #	Freq.(MHz)	Channel #	Freq. (MHz)
L	23755	706.5	23780	709
M	23790	710	23790	710
H	23825	713.5	23800	711

LTE Band 4

	Bandwidth 1.4 MHz		Bandwidth 3 MHz		Bandwidth 5 MHz		Bandwidth 10 MHz		Bandwidth 15 MHz		Bandwidth 20 MHz	
	Ch. #	Freq. (MHz)	Ch. #	Freq. (MHz)	Ch. #	Freq. (MHz)	Ch. #	Freq. (MHz)	Ch. #	Freq. (MHz)	Ch. #	Freq. (MHz)
L	19957	1710.7	19965	1711.5	19975	1712.5	20000	1715	20025	1717.5	20050	1720
M	20175	1732.5	20175	1732.5	20175	1732.5	20175	1732.5	20175	1732.5	20175	1732.5
H	20393	1754.3	20385	1753.5	20375	1752.5	20350	1750	20325	1747.5	20300	1745

LTE Band 7

	Bandwidth 5 MHz		Bandwidth 10 MHz		Bandwidth 15 MHz		Bandwidth 20 MHz	
	Ch. #	Freq. (MHz)	Ch. #	Freq. (MHz)	Ch. #	Freq. (MHz)	Ch. #	Freq. (MHz)
L	20775	2502.5	20800	2505	20825	2507.5	20850	2510
M	21100	2535	21100	2535	21100	2535	21100	2535
H	21425	2567.5	21400	2565	21375	2562.5	21350	2560

5. RF Exposure Limits

5.1 Uncontrolled Environment

Uncontrolled Environments are defined as locations where there is the exposure of individuals who have no knowledge or control of their exposure. The general population/uncontrolled exposure limits are applicable to situations in which the general public may be exposed or in which persons who are exposed as a consequence of their employment may not be made fully aware of the potential for exposure or cannot exercise control over their exposure. Members of the general public would come under this category when exposure is not employment-related; for example, in the case of a wireless transmitter that exposes persons in its vicinity.

5.2 Controlled Environment

Controlled Environments are defined as locations where there is exposure that may be incurred by persons who are aware of the potential for exposure, (i.e. as a result of employment or occupation). In general, occupational/controlled exposure limits are applicable to situations in which persons are exposed as a consequence of their employment, who have been made fully aware of the potential for exposure and can exercise control over their exposure. The exposure category is also applicable when the exposure is of a transient nature due to incidental passage through a location where the exposure levels may be higher than the general population/uncontrolled limits, but the exposed person is fully aware of the potential for exposure and can exercise control over his or her exposure by leaving the area or by some other appropriate means.

Limits for Occupational/Controlled Exposure (W/kg)

Whole-Body	Partial-Body	Hands, Wrists, Feet and Ankles
0.4	8.0	20.0

Limits for General Population/Uncontrolled Exposure (W/kg)

Whole-Body	Partial-Body	Hands, Wrists, Feet and Ankles
0.08	1.6	4.0

1. Whole-Body SAR is averaged over the entire body, partial-body SAR is averaged over any 1gram of tissue defined as a tissue volume in the shape of a cube. SAR for hands, wrists, feet and ankles is averaged over any 10 grams of tissue defined as a tissue volume in the shape of a cube.

6. Specific Absorption Rate (SAR)

6.1 Introduction

SAR is related to the rate at which energy is absorbed per unit mass in an object exposed to a radio field. The SAR distribution in a biological body is complicated and is usually carried out by experimental techniques or numerical modeling. The standard recommends limits for two tiers of groups, occupational/controlled and general population/uncontrolled, based on a person's awareness and ability to exercise control over his or her exposure. In general, occupational/controlled exposure limits are higher than the limits for general population/uncontrolled.

6.2 SAR Definition

The SAR definition is the time derivative (rate) of the incremental energy (dW) absorbed by (dissipated in) an incremental mass (dm) contained in a volume element (dv) of a given density (ρ). The equation description is as below:

$$\mathbf{SAR} = \frac{\mathbf{d}}{\mathbf{dt}}\left(\frac{\mathbf{dW}}{\mathbf{dm}}\right) = \frac{\mathbf{d}}{\mathbf{dt}}\left(\frac{\mathbf{dW}}{\boldsymbol{\rho}\mathbf{dv}}\right)$$

SAR is expressed in units of Watts per kilogram (W/kg)

$$\mathbf{SAR} = \frac{\boldsymbol{\sigma}|\mathbf{E}|^2}{\boldsymbol{\rho}}$$

Where: σ is the conductivity of the tissue, ρ is the mass density of the tissue and E is the RMS electrical field strength.

7. System Description and Setup

The DASY system used for performing compliance tests consists of the following items:

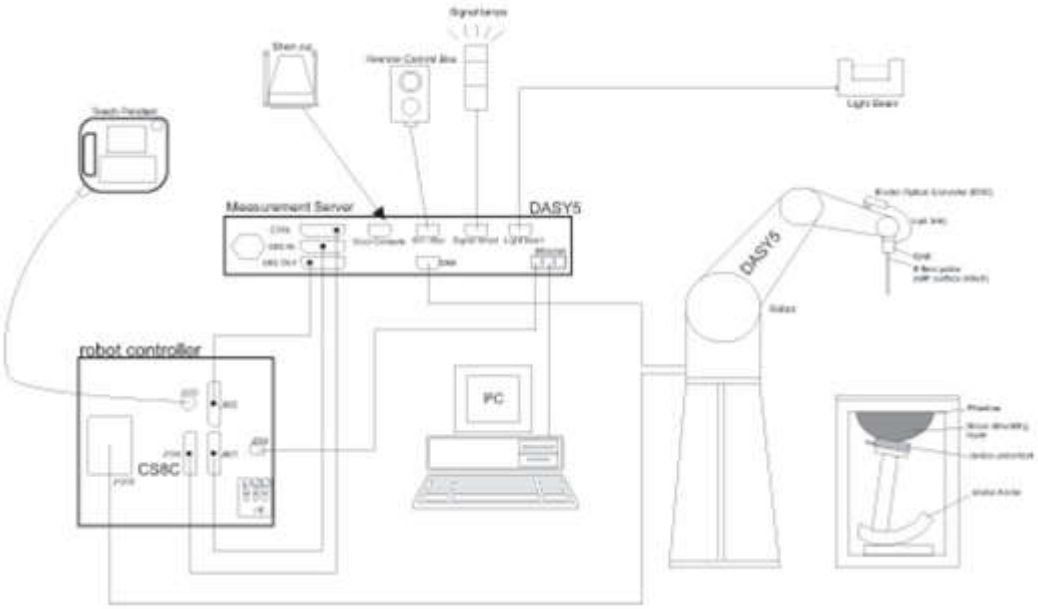

- A standard high precision 6-axis robot with controller, teach pendant and software. An arm extension for accommodating the data acquisition electronics (DAE).
- An isotropic Field probe optimized and calibrated for the targeted measurement.
- A data acquisition electronics (DAE) which performs the signal amplification, signal multiplexing, AD-conversion, offset measurements, mechanical surface detection, collision detection, etc. The unit is battery powered with standard or rechargeable batteries. The signal is optically transmitted to the EOC.
- The Electro-optical converter (EOC) performs the conversion from optical to electrical signals for the digital communication to the DAE. To use optical surface detection, a special version of the EOC is required. The EOC signal is transmitted to the measurement server.
- The function of the measurement server is to perform the time critical tasks such as signal filtering, control of the robot operation and fast movement interrupts.
- The Light Beam used is for probe alignment. This improves the (absolute) accuracy of the probe positioning.
- A computer running WinXP or Win7 and the DASY5 software.
- Remote control and teach pendant as well as additional circuitry for robot safety such as warning lamps, etc.
- The phantom, the device holder and other accessories according to the targeted measurement.

8. Measurement Procedures

The measurement procedures are as follows:

<Conducted power measurement>

(a) For WWAN power measurement, use base station simulator to configure EUT WWAN transmission in conducted connection with RF cable, at maximum power in each supported wireless interface and frequency band.
(b) Read the WWAN RF power level from the base station simulator.
(c) For WLAN/BT power measurement, use engineering software to configure EUT WLAN/BT continuously transmission, at maximum RF power in each supported wireless interface and frequency band
(d) Connect EUT RF port through RF cable to the power meter, and measure WLAN/BT output power

<SAR measurement>

(a) Use base station simulator to configure EUT WWAN transmission in radiated connection, and engineering software to configure EUT WLAN/BT continuously transmission, at maximum RF power, in the highest power channel.
(b) Place the EUT in the positions as Appendix D demonstrates.
(c) Set scan area, grid size and other setting on the DASY software.
(d) Measure SAR results for the highest power channel on each testing position.
(e) Find out the largest SAR result on these testing positions of each band
(f) Measure SAR results for other channels in worst SAR testing position if the reported SAR of highest power channel is larger than 0.8 W/kg

According to the test standard, the recommended procedure for assessing the peak spatial-average SAR value consists of the following steps:

(a) Power reference measurement
(b) Area scan
(c) Zoom scan
(d) Power drift measurement

8.1 Spatial Peak SAR Evaluation

The procedure for spatial peak SAR evaluation has been implemented according to the test standard. It can be conducted for 1g and 10g, as well as for user-specific masses. The DASY software includes all numerical procedures necessary to evaluate the spatial peak SAR value.

The base for the evaluation is a "cube" measurement. The measured volume must include the 1g and 10g cubes with the highest averaged SAR values. For that purpose, the center of the measured volume is aligned to the interpolated peak SAR value of a previously performed area scan.

The entire evaluation of the spatial peak values is performed within the post-processing engine (SEMCAD). The system always gives the maximum values for the 1g and 10g cubes. The algorithm to find the cube with highest averaged SAR is divided into the following stages:

(a) Extraction of the measured data (grid and values) from the Zoom Scan
(b) Calculation of the SAR value at every measurement point based on all stored data (A/D values and measurement parameters)
(c) Generation of a high-resolution mesh within the measured volume
(d) Interpolation of all measured values form the measurement grid to the high-resolution grid
(e) Extrapolation of the entire 3-D field distribution to the phantom surface over the distance from sensor to surface
(f) Calculation of the averaged SAR within masses of 1g and 10g

8.2 Power Reference Measurement

The Power Reference Measurement and Power Drift Measurements are for monitoring the power drift of the device under test in the batch process. The minimum distance of probe sensors to surface determines the closest measurement point to phantom surface. This distance cannot be smaller than the distance of sensor calibration points to probe tip as defined in the probe properties.

8.3 Area Scan

The area scan is used as a fast scan in two dimensions to find the area of high field values, before doing a fine measurement around the hot spot. The sophisticated interpolation routines implemented in DASY software can find the maximum found in the scanned area, within a range of the global maximum. The range (in dB0 is specified in the standards for compliance testing. For example, a 2 dB range is required in IEEE standard 1528 and IEC 62209 standards, whereby 3 dB is a requirement when compliance is assessed in accordance with the ARIB standard (Japan), if only one zoom scan follows the area scan, then only the absolute maximum will be taken as reference. For cases where multiple maximums are detected, the number of zoom scans has to be increased accordingly.

Area scan parameters extracted from FCC KDB 865664 D01v01r04 SAR measurement 100 MHz to 6 GHz.

	≤ 3 GHz	> 3 GHz
Maximum distance from closest measurement point (geometric center of probe sensors) to phantom surface	5 ± 1 mm	½·δ·ln(2) ± 0.5 mm
Maximum probe angle from probe axis to phantom surface normal at the measurement location	30° ± 1°	20° ± 1°
Maximum area scan spatial resolution: Δx_{Area}, Δy_{Area}	≤ 2 GHz: ≤ 15 mm 2 – 3 GHz: ≤ 12 mm	3 – 4 GHz: ≤ 12 mm 4 – 6 GHz: ≤ 10 mm
	When the x or y dimension of the test device, in the measurement plane orientation, is smaller than the above, the measurement resolution must be ≤ the corresponding x or y dimension of the test device with at least one measurement point on the test device.	

8.4 Zoom Scan

Zoom scans are used assess the peak spatial SAR values within a cubic averaging volume containing 1 gram and 10 gram of simulated tissue. The zoom scan measures points (refer to table below) within a cube shoes base faces are centered on the maxima found in a preceding area scan job within the same procedure. When the measurement is done, the zoom scan evaluates the averaged SAR for 1 gram and 10 gram and displays these values next to the job's label.

Zoom scan parameters extracted from FCC KDB 865664 D01v01r04 SAR measurement 100 MHz to 6 GHz.

			≤ 3 GHz	> 3 GHz
Maximum zoom scan spatial resolution: Δx_{Zoom}, Δy_{Zoom}			≤ 2 GHz: ≤ 8 mm 2 – 3 GHz: ≤ 5 mm*	3 – 4 GHz: ≤ 5 mm* 4 – 6 GHz: ≤ 4 mm*
Maximum zoom scan spatial resolution, normal to phantom surface	uniform grid: $\Delta z_{Zoom}(n)$		≤ 5 mm	3 – 4 GHz: ≤ 4 mm 4 – 5 GHz: ≤ 3 mm 5 – 6 GHz: ≤ 2 mm
	graded grid	$\Delta z_{Zoom}(1)$: between 1st two points closest to phantom surface	≤ 4 mm	3 – 4 GHz: ≤ 3 mm 4 – 5 GHz: ≤ 2.5 mm 5 – 6 GHz: ≤ 2 mm
		$\Delta z_{Zoom}(n>1)$: between subsequent points	$\leq 1.5 \cdot \Delta z_{Zoom}(n-1)$	
Minimum zoom scan volume	x, y, z		≥ 30 mm	3 – 4 GHz: ≥ 28 mm 4 – 5 GHz: ≥ 25 mm 5 – 6 GHz: ≥ 22 mm

Note: δ is the penetration depth of a plane-wave at normal incidence to the tissue medium; see draft standard IEEE P1528-2011 for details.

* When zoom scan is required and the *reported* SAR from the *area scan based 1-g SAR estimation* procedures of KDB 447498 is ≤ 1.4 W/kg, ≤ 8 mm, ≤ 7 mm and ≤ 5 mm zoom scan resolution may be applied, respectively, for 2 GHz to 3 GHz, 3 GHz to 4 GHz and 4 GHz to 6 GHz.

8.5 Volume Scan Procedures

The volume scan is used for assess overlapping SAR distributions for antennas transmitting in different frequency bands. It is equivalent to an oversized zoom scan used in standalone measurements. The measurement volume will be used to enclose all the simultaneous transmitting antennas. For antennas transmitting simultaneously in different frequency bands, the volume scan is measured separately in each frequency band. In order to sum correctly to compute the 1g aggregate SAR, the EUT remain in the same test position for all measurements and all volume scan use the same spatial resolution and grid spacing. When all volume scan were completed, the software, SEMCAD postprocessor can combine and subsequently superpose these measurement data to calculating the multiband SAR.

8.6 Power Drift Monitoring

All SAR testing is under the EUT install full charged battery and transmit maximum output power. In DASY measurement software, the power reference measurement and power drift measurement procedures are used for monitoring the power drift of EUT during SAR test. Both these procedures measure the field at a specified reference position before and after the SAR testing. The software will calculate the field difference in dB. If the power drifts more than 5%, the SAR will be retested.

9. Test Equipment List

Manufacturer	Name of Equipment	Type/Model	Serial Number	Calibration	
				Last Cal.	Due Date
SPEAG	750MHz System Validation Kit	D750V3	1132	Jan. 06, 2015	Jan. 05, 2016
SPEAG	835MHz System Validation Kit	D835V2	499	Mar. 20, 2015	Mar. 19, 2016
SPEAG	1750MHz System Validation Kit	D1750V2	1137	Apr. 28, 2015	Apr. 27, 2016
SPEAG	1900MHz System Validation Kit	D1900V2	5d041	Mar. 24, 2015	Mar. 23, 2016
SPEAG	2450MHz System Validation Kit	D2450V2	924	Nov. 19, 2014	Nov. 18, 2015
SPEAG	2600MHz System Validation Kit	D2600V2	1070	Nov. 19, 2014	Nov. 18, 2015
SPEAG	Data Acquisition Electronics	DAE4	778	Aug. 21, 2014	Aug. 20, 2015
SPEAG	Data Acquisition Electronics	DAE4	1399	Nov. 13, 2014	Nov. 12, 2015
SPEAG	Dosimetric E-Field Probe	EX3DV4	3578	Mar. 31, 2015	Mar. 30, 2016
SPEAG	Dosimetric E-Field Probe	EX3DV4	3955	Nov. 21, 2014	Nov. 20, 2015
WonDer	Thermometer	WD-5015	TM685	Oct. 21, 2014	Oct. 20, 2015
Wisewind	Thermometer	ETP-101	TM225	Oct. 21, 2014	Oct. 20, 2015
Anritsu	Radio Communication Analyzer	MT8820C	6201074414	Feb. 06, 2015	Feb. 05, 2016
Agilent	Wireless Communication Test Set	E5515C	MY48360820	Jan. 10, 2014	Jan. 09, 2016
Anritsu	BT Base Station	MT8852B	1350002	Dec. 12, 2014	Dec. 11, 2015
SPEAG	Device Holder	N/A	N/A	N/A	N/A
Agilent	Signal Generator	N5181A	MY50145381	Dec. 11, 2014	Dec. 10, 2015
R&S	Signal Generator	SMJ 100A	101375	Feb. 12, 2015	Feb. 11, 2016
Agilent	ENA Network Analyzer	E5071C	MY46316648	Feb. 11, 2015	Feb. 10, 2016
SPEAG	Dielectric Probe Kit	DAK-3.5	1126	Jul. 22, 2014	Jul. 21, 2015
SPEAG	Dielectric Probe Kit	DAK-3.5	1138	Nov. 18, 2014	Nov. 17, 2015
Anritsu	Power Meter	ML2495A	1349001	Dec. 03, 2014	Dec. 02, 2015
Anritsu	Power Sensor	MA2411B	1306099	Dec. 03, 2014	Dec. 02, 2015
R&S	Spectrum Analyzer	FSP 7	101131	Jul. 10, 2014	Jul. 09, 2015
Anritsu	Spectrum Analyzer	MS2830A	6201396378	Jun. 03, 2014	Jun. 02, 2015
Agilent	Dual Directional Coupler	778D	50422	Note1	
Woken	Attenuator 1	WK0602-XX	N/A	Note1	
PE	Attenuator 2	PE7005-10	N/A	Note1	
PE	Attenuator 3	PE7005- 3	N/A	Note1	
AR	Power Amplifier	5S1G4M2	0328767	Note1	
Mini-Circuits	Power Amplifier	ZVE-3W	162601250	Note1	
Mini-Circuits	Power Amplifier	ZHL-42W+	13440021344	Note1	

General Note:

1. Prior to system verification and validation, the path loss from the signal generator to the system check source and the power meter, which includes the amplifier, cable, attenuator and directional coupler, was measured by the network analyzer. The reading of the power meter was offset by the path loss difference between the path to the power meter and the path to the system check source to monitor the actual power level fed to the system check source.

10. System Verification

10.1 Tissue Verification

The following tissue formulations are provided for reference only as some of the parameters have not been thoroughly verified. The composition of ingredients may be modified accordingly to achieve the desired target tissue parameters required for routine SAR evaluation.

Frequency (MHz)	Water (%)	Sugar (%)	Cellulose (%)	Salt (%)	Preventol (%)	DGBE (%)	Conductivity (σ)	Permittivity (εr)
For Head								
750	41.1	57.0	0.2	1.4	0.2	0	0.89	41.9
835	40.3	57.9	0.2	1.4	0.2	0	0.90	41.5
1800, 1900, 2000	55.2	0	0	0.3	0	44.5	1.40	40.0
2450	55.0	0	0	0	0	45.0	1.80	39.2
2600	54.8	0	0	0.1	0	45.1	1.96	39.0
For Body								
750	51.7	47.2	0	0.9	0.1	0	0.96	55.5
835	50.8	48.2	0	0.9	0.1	0	0.97	55.2
1800, 1900, 2000	70.2	0	0	0.4	0	29.4	1.52	53.3
2450	68.6	0	0	0	0	31.4	1.95	52.7
2600	68.1	0	0	0.1	0	31.8	2.16	52.5

<Tissue Dielectric Parameter Check Results>

Frequency (MHz)	Tissue Type	Liquid Temp. (℃)	Conductivity (σ)	Permittivity (ε_r)	Conductivity Target (σ)	Permittivity Target (ε_r)	Delta (σ) (%)	Delta (ε_r) (%)	Limit (%)	Date
750	Head	22.3	0.898	43.176	0.89	41.90	0.90	3.05	±5	May 18, 2015
750	Body	22.3	0.967	57.868	0.96	55.50	0.73	4.27	±5	May 18, 2015
835	Head	22.7	0.902	42.289	0.90	41.50	0.22	1.90	±5	May 18, 2015
835	Body	22.3	0.986	56.013	0.97	55.20	1.65	1.47	±5	May 17, 2015
1750	Head	22.4	1.359	39.874	1.37	40.10	-0.80	-0.56	±5	May 19, 2015
1750	Body	22.4	1.532	54.004	1.49	53.40	2.82	1.13	±5	May 17, 2015
1900	Head	22.4	1.428	39.240	1.40	40.00	2.00	-1.90	±5	May 19, 2015
1900	Body	22.5	1.556	55.366	1.52	53.30	2.37	3.88	±5	May 17, 2015
2450	Head	22.3	1.855	39.470	1.80	39.20	3.06	0.69	±5	May 20, 2015
2450	Head	22.3	1.845	39.275	1.80	39.20	2.50	0.19	±5	May 21, 2015
2450	Body	22.3	2.032	51.914	1.95	52.70	4.21	-1.49	±5	May 20, 2015
2450	Body	22.4	1.929	52.480	1.95	52.70	-1.08	-0.42	±5	May 21, 2015
2600	Head	22.3	2.032	37.833	1.96	39.00	3.67	-2.99	±5	May 20, 2015
2600	Body	22.6	2.225	52.835	2.16	52.50	3.01	0.64	±5	May 16, 2015

10.2 System Performance Check Results

Comparing to the original SAR value provided by SPEAG, the verification data should be within its specification of 10 %. Below table shows the target SAR and measured SAR after normalized to 1W input power. The table below indicates the system performance check can meet the variation criterion and the plots can be referred to Appendix A of this report.

Date	Frequency (MHz)	Tissue Type	Input Power (mW)	Dipole S/N	Probe S/N	DAE S/N	Measured SAR (W/kg)	Targeted SAR (W/kg)	Normalized SAR (W/kg)	Deviation (%)
May 18, 2015	750	Head	250	1132	3578	778	2.15	7.94	8.6	8.31
May 18, 2015	750	Body	250	1132	3578	778	2.05	8.46	8.2	-3.07
May 18, 2015	835	Head	250	499	3578	778	2.27	9.20	9.08	-1.30
May 17, 2015	835	Body	250	499	3578	778	2.35	9.30	9.4	1.08
May 19, 2015	1750	Head	250	1137	3578	778	8.44	36.20	33.76	-6.74
May 17, 2015	1750	Body	250	1137	3578	778	8.85	36.90	35.4	-4.07
May 19, 2015	1900	Head	250	5d041	3578	778	9.32	40.00	37.28	-6.80
May 17, 2015	1900	Body	250	5d041	3578	778	9.62	39.80	38.48	-3.32
May 20, 2015	2450	Head	250	924	3955	1399	12.40	51.90	49.6	-4.43
May 21, 2015	2450	Head	250	924	3578	778	12.30	51.90	49.2	-5.20
May 20, 2015	2450	Body	250	924	3955	1399	12.20	51.40	48.8	-5.06
May 21, 2015	2450	Body	250	924	3578	778	13.60	51.40	54.4	5.84
May 20, 2015	2600	Head	250	1070	3955	1399	14.40	56.90	57.6	1.23
May 16, 2015	2600	Body	250	1070	3578	778	13.90	55.30	55.6	0.54

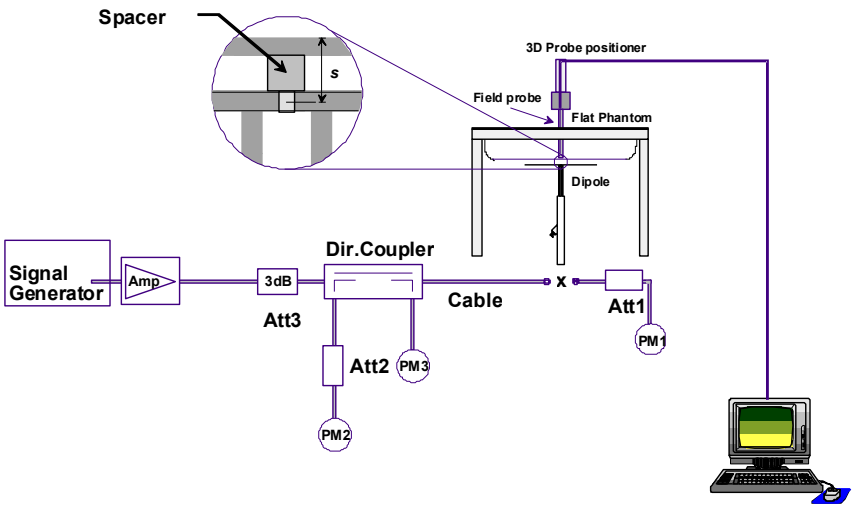

Fig 8.3.1 System Performance Check Setup

Fig 8.3.2 Setup Photo

11. RF Exposure Positions

11.1 Ear and handset reference point

Figure 9.1.1 shows the front, back, and side views of the SAM phantom. The center-of-mouth reference point is labeled “M,” the left ear reference point (ERP) is marked “LE,” and the right ERP is marked “RE.” Each ERP is 15 mm along the B-M (back-mouth) line behind the entrance-to-ear-canal (EEC) point, as shown in Figure 9.1.2 The Reference Plane is defined as passing through the two ear reference points and point M. The line N-F (neck-front), also called the reference pivoting line, is normal to the Reference Plane and perpendicular to both a line passing through RE and LE and the B-M line (see Figure 9.1.3). Both N-F and B-M lines should be marked on the exterior of the phantom shell to facilitate handset positioning. Posterior to the N-F line the ear shape is a flat surface with 6 mm thickness at each ERP, and forward of the N-F line the ear is truncated, as illustrated in Figure 9.1.2. The ear truncation is introduced to preclude the ear lobe from interfering with handset tilt, which could lead to unstable positioning at the cheek.

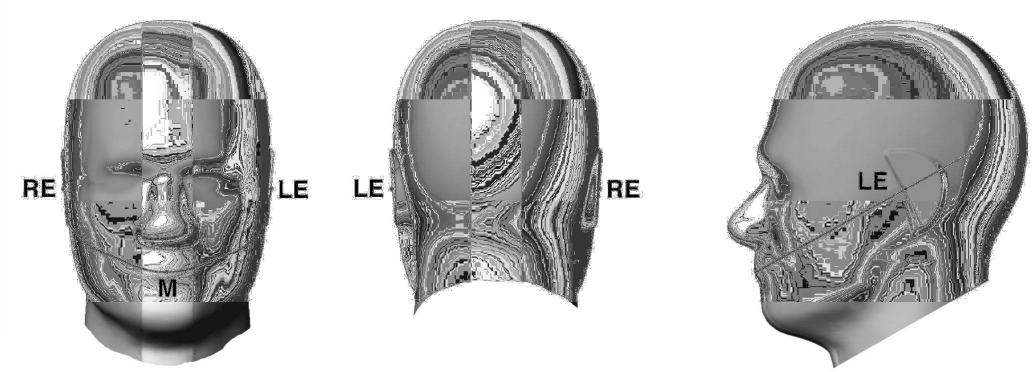

Fig 9.1.1 Front, back, and side views of SAM twin phantom

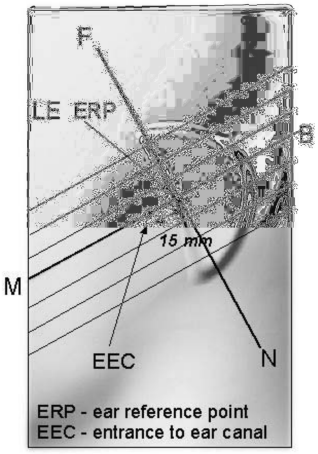

Fig 9.1.2 Close-up side view of phantom showing the ear region.

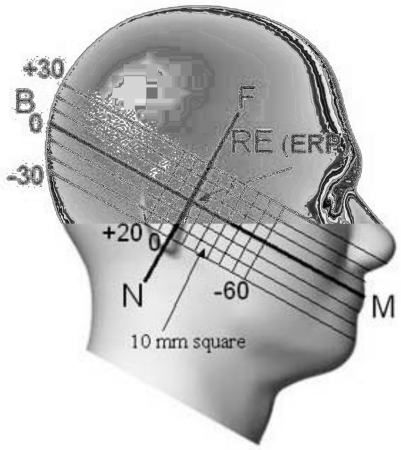

Fig 9.1.3 Side view of the phantom showing relevant markings and seven cross-sectional plane locations

11.2 Definition of the cheek position

1. Ready the handset for talk operation, if necessary. For example, for handsets with a cover piece (flip cover), open the cover. If the handset can transmit with the cover closed, both configurations must be tested.
2. Define two imaginary lines on the handset—the vertical centerline and the horizontal line. The vertical centerline passes through two points on the front side of the handset—the midpoint of the width wt of the handset at the level of the acoustic output (point A in Figure 9.2.1 and Figure 9.2.2), and the midpoint of the width wb of the bottom of the handset (point B). The horizontal line is perpendicular to the vertical centerline and passes through the center of the acoustic output (see Figure 9.2.1). The two lines intersect at point A. Note that for many handsets, point A coincides with the center of the acoustic output; however, the acoustic output may be located elsewhere on the horizontal line. Also note that the vertical centerline is not necessarily parallel to the front face of the handset (see Figure 9.2.2), especially for clamshell handsets, handsets with flip covers, and other irregularly-shaped handsets.
3. Position the handset close to the surface of the phantom such that point A is on the (virtual) extension of the line passing through points RE and LE on the phantom (see Figure 9.2.3), such that the plane defined by the vertical centerline and the horizontal line of the handset is approximately parallel to the sagittal plane of the phantom.
4. Translate the handset towards the phantom along the line passing through RE and LE until handset point A touches the pinna at the ERP.
5. While maintaining the handset in this plane, rotate it around the LE-RE line until the vertical centerline is in the plane normal to the plane containing B-M and N-F lines, i.e., the Reference Plane.
6. Rotate the handset around the vertical centerline until the handset (horizontal line) is parallel to the N-F line.
7. While maintaining the vertical centerline in the Reference Plane, keeping point A on the line passing through RE and LE, and maintaining the handset contact with the pinna, rotate the handset about the N-F line until any point on the handset is in contact with a phantom point below the pinna on the cheek. See Figure 9.2.3. The actual rotation angles should be documented in the test report.

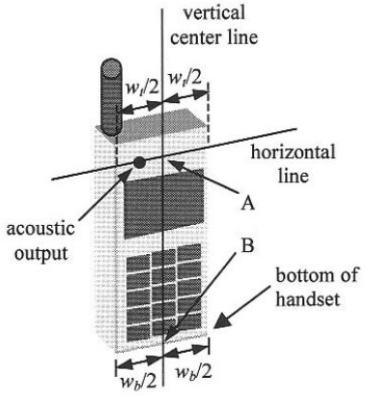

Fig 9.2.1 Handset vertical and horizontal reference lines—"fixed case

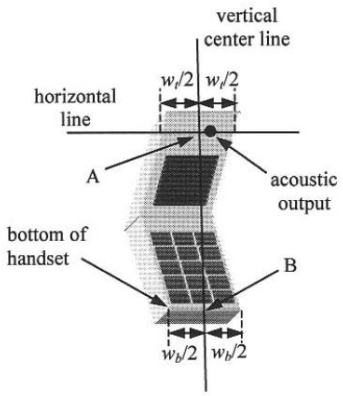

Fig 9.2.2 Handset vertical and horizontal reference lines—"clam-shell case"

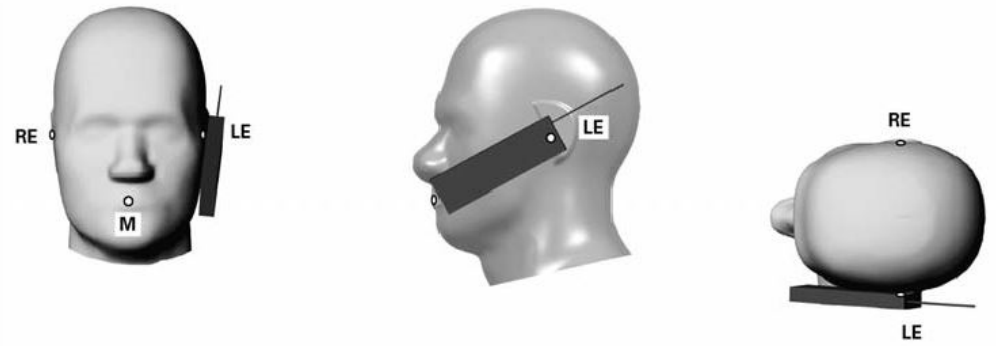

Fig 9.2.3 cheek or touch position. The reference points for the right ear (RE), left ear (LE), and mouth (M), which establish the Reference Plane for handset positioning, are indicated.

11.3 Definition of the tilt position

1. Ready the handset for talk operation, if necessary. For example, for handsets with a cover piece (flip cover), open the cover. If the handset can transmit with the cover closed, both configurations must be tested.
2. While maintaining the orientation of the handset, move the handset away from the pinna along the line passing through RE and LE far enough to allow a rotation of the handset away from the cheek by 15°.
3. Rotate the handset around the horizontal line by 15°.
4. While maintaining the orientation of the handset, move the handset towards the phantom on the line passing through RE and LE until any part of the handset touches the ear. The tilt position is obtained when the contact point is on the pinna. See Figure 9.3.1. If contact occurs at any location other than the pinna, e.g., the antenna at the back of the phantom head, the angle of the handset should be reduced. In this case, the tilt position is obtained if any point on the handset is in contact with the pinna and a second point

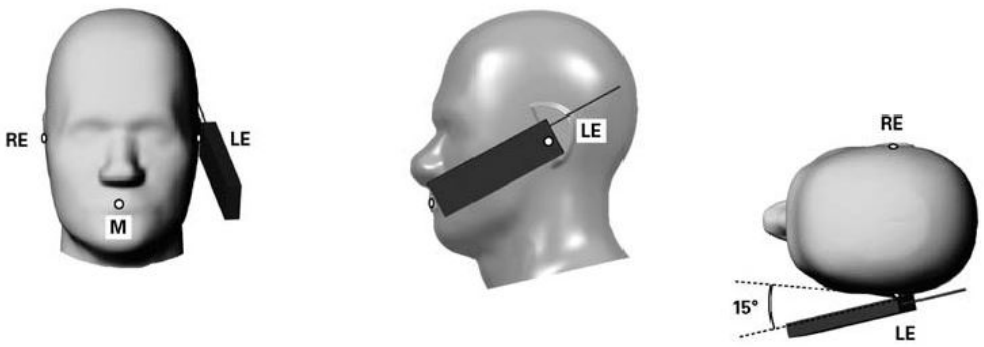

Fig 9.3.1 Tilt position. The reference points for the right ear (RE), left ear (LE), and mouth (M), which define the Reference Plane for handset positioning, are indicated.

11.4 Body Worn Accessory

Body-worn operating configurations are tested with the belt-clips and holsters attached to the device and positioned against a flat phantom in a normal use configuration (see Figure 9.4). Per KDB 648474 D04v01r03, body-worn accessory exposure is typically related to voice mode operations when handsets are carried in body-worn accessories. The body-worn accessory procedures in FCC KDB 447498 D01v06 should be used to test for body-worn accessory SAR compliance, without a headset connected to it. This enables the test results for such configuration to be compatible with that required for hotspot mode when the body-worn accessory test separation distance is greater than or equal to that required for hotspot mode, when applicable. When the reported SAR for body-worn accessory, measured without a headset connected to the handset is < 1.2 W/kg, the highest reported SAR configuration for that wireless mode and frequency band should be repeated for that body-worn accessory with a handset attached to the handset.

Accessories for body-worn operation configurations are divided into two categories: those that do not contain metallic components and those that do contain metallic components and those that do contain metallic components. When multiple accessories that do not contain metallic components are supplied with the device, the device is tested with only the accessory that dictates the closest spacing to the body. Then multiple accessories that contain metallic components are test with the device with each accessory. If multiple accessories share an identical metallic component (i.e. the same metallic belt-chip used with different holsters with no other metallic components) only the accessory that dictates the closest spacing to the body is tested.

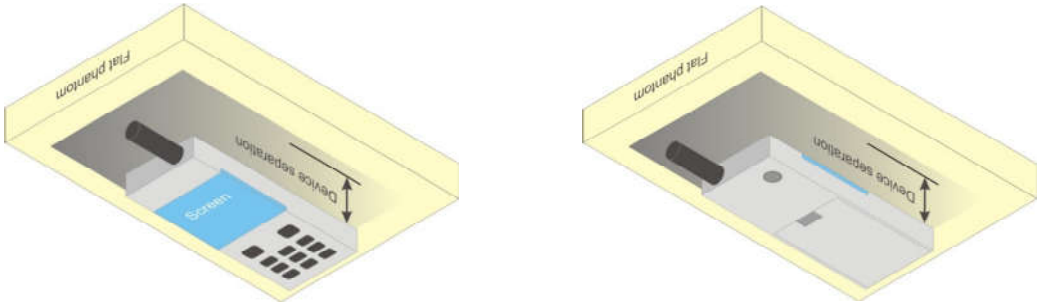

Fig 9.4 Body Worn Position

11.5 Wireless Router

Some battery-operated handsets have the capability to transmit and receive user through simultaneous transmission of WIFI simultaneously with a separate licensed transmitter. The FCC has provided guidance in FCC HDB Publication 941225 D06 v02r01 where SAR test considerations for handsets (L x W ≥ 9 cm x 5 cm) are based on a composite test separation distance of 10mm from the front, back and edges of the device containing transmitting antennas within 2.5cm of their edges, determined form general mixed use conditions for this type of devices. Since the hotspot SAR results may overlap with the body-worn accessory SAR requirements, the more conservative configurations can be considered, thus excluding some body-worn accessory SAR tests.

When the user enables the personal wireless router functions for the handset, actual operations include simultaneous transmission of both the WIFI transmitter and another licensed transmitter. Both transmitters often do not transmit at the same transmitting frequency and thus cannot be evaluated for SAR under actual use conditions due to the limitations of the SAR assessment probes. Therefore, SAR must be evaluated for each frequency transmission and mode separately and spatially summed with the WIFI transmitter according to FCC KDB Publication 447498 D01v06 publication procedures. The “Portable Hotspot” feature on the handset was NOT activated during SAR assessments, to ensure the SAR measurements were evaluated for a single transmission frequency RF signal at a time.

12. Conducted RF Output Power (Unit: dBm)

<GSM Conducted Power>

1. Per KDB 447498 D01v06, the maximum output power channel is used for SAR testing and for further SAR test reduction.
2. Per KDB 941225 D01v03r01, considering the possibility of e.g. 3rd party VoIP operation for Head and body-worn SAR test reduction for GSM and GPRS and EDGE modes is determined by the source-based time-averaged output power including tune-up tolerance. The mode with highest specified time-averaged output power should be tested for SAR compliance in the applicable exposure conditions. For modes with the same specified maximum output power and tolerance, the higher number time-slot configuration should be tested. Therefore, the EUT were set in GPRS (4Tx slots) for GSM850 and GPRS (2Tx slots) for GSM1900.
3. Per KDB 941225 D01v03r01, for Hotspot SAR test reduction for GPRS and EDGE modes is determined by the source-based time-averaged output power including tune-up tolerance, for modes with the same specified maximum output power and tolerance, the higher number time-slot configuration should be tested, therefore, the EUT were set in GPRS (4Tx slots) for GSM850 and GPRS (2Tx slots) for GSM1900..

SIM1:

Band GSM850	Burst Average Power (dBm)			Tune-up Limit (dBm)	Frame-Average Power (dBm)			Tune-up Limit (dBm)
TX Channel	128	189	251		128	189	251	
Frequency (MHz)	824.2	836.4	848.8		824.2	836.4	848.8	
GSM (GMSK, 1 Tx slot)	31.93	31.95	**32.08**	33.5	22.93	22.95	23.08	24.5
GPRS (GMSK, 1 Tx slot) – CS1	31.65	31.87	31.97	33.5	22.65	22.87	22.97	24.5
GPRS (GMSK, 2 Tx slots) – CS1	29.40	29.68	29.94	30.5	23.40	23.68	23.94	24.5
GPRS (GMSK, 3 Tx slots) – CS1	28.42	28.71	28.99	29.0	24.16	24.45	24.73	24.74
GPRS (GMSK, 4 Tx slots) – CS1	27.48	27.71	27.91	28.0	24.48	24.71	**24.91**	25.0
EDGE (8PSK, 1 Tx slot) – MCS5	26.49	26.77	26.97	27.5	17.49	17.77	17.97	18.5
EDGE (8PSK, 2 Tx slots) – MCS5	25.61	25.79	25.95	26.5	19.61	19.79	19.95	20.5
EDGE (8PSK, 3 Tx slots) – MCS5	24.49	24.68	24.82	25.5	20.23	20.42	20.56	21.24
EDGE (8PSK, 4 Tx slots) – MCS5	23.42	23.56	23.71	24.5	20.42	20.56	20.71	21.5
Band GSM1900	Burst Average Power (dBm)			Tune-up Limit (dBm)	Frame-Average Power (dBm)			Tune-up Limit (dBm)
TX Channel	512	661	810		512	661	810	
Frequency (MHz)	1850.2	1880	1909.8		1850.2	1880	1909.8	
GSM (GMSK, 1 Tx slot)	30.03	29.92	**30.10**	30.5	21.03	20.92	21.10	21.5
GPRS (GMSK, 1 Tx slot) – CS1	30.02	29.89	30.09	30.5	21.02	20.89	21.09	21.50
GPRS (GMSK, 2 Tx slots) – CS1	27.48	27.19	27.61	29.0	21.48	21.19	**21.61**	23.0
GPRS (GMSK, 3 Tx slots) – CS1	26.02	25.84	26.22	27.0	21.76	21.58	21.96	22.74
GPRS (GMSK, 4 Tx slots) – CS1	24.80	24.56	24.89	25.0	21.80	21.56	21.89	22.0
EDGE (8PSK, 1 Tx slot) – MCS5	24.78	24.42	24.90	25.0	15.78	15.42	15.90	16.0
EDGE (8PSK, 2 Tx slots) – MCS5	24.01	23.74	24.37	24.5	18.01	17.74	18.37	18.5
EDGE (8PSK, 3 Tx slots) – MCS5	23.08	22.66	23.20	23.5	18.82	18.40	18.94	19.24
EDGE (8PSK, 4 Tx slots) – MCS5	21.82	21.47	21.95	22.5	18.82	18.47	18.95	19.5

Remark: The frame-averaged power is linearly scaled the maximum burst averaged power over 8 time slots.
The calculated method are shown as below:
Frame-averaged power = Maximum burst averaged power (1 Tx Slot) - 9 dB
Frame-averaged power = Maximum burst averaged power (2 Tx Slots) - 6 dB
Frame-averaged power = Maximum burst averaged power (3 Tx Slots) - 4.26 dB
Frame-averaged power = Maximum burst averaged power (4 Tx Slots) - 3 dB

SIM2:

Band GSM850	Burst Average Power (dBm)			Tune-up Limit (dBm)	Frame-Average Power (dBm)			Tune-up Limit (dBm)
TX Channel	128	189	251		128	189	251	
Frequency (MHz)	824.2	836.4	848.8		824.2	836.4	848.8	
GSM (GMSK, 1 Tx slot)	31.92	31.94	**32.06**	33.5	22.92	22.94	23.06	24.5
GPRS (GMSK, 1 Tx slot) – CS1	31.63	31.86	31.95	33.5	22.63	22.86	22.95	24.5
GPRS (GMSK, 2 Tx slots) – CS1	29.39	29.65	29.90	30.5	23.39	23.65	23.90	24.5
GPRS (GMSK, 3 Tx slots) – CS1	28.40	28.70	28.97	29.0	24.14	24.44	24.71	24.74
GPRS (GMSK, 4 Tx slots) – CS1	27.47	27.70	27.90	28.0	24.47	24.70	**24.90**	25.0
EDGE (8PSK, 1 Tx slot) – MCS5	26.46	26.75	26.96	27.5	17.46	17.75	17.96	18.5
EDGE (8PSK, 2 Tx slots) – MCS5	25.60	25.76	25.93	26.5	19.60	19.76	19.93	20.5
EDGE (8PSK, 3 Tx slots) – MCS5	24.48	24.64	24.81	25.5	20.22	20.38	20.55	21.24
EDGE (8PSK, 4 Tx slots) – MCS5	23.40	23.55	23.70	24.5	20.40	20.55	20.70	21.5
Band GSM1900	Burst Average Power (dBm)			Tune-up Limit (dBm)	Frame-Average Power (dBm)			Tune-up Limit (dBm)
TX Channel	512	661	810		512	661	810	
Frequency (MHz)	1850.2	1880	1909.8		1850.2	1880	1909.8	
GSM (GMSK, 1 Tx slot)	30.02	29.90	**30.08**	30.50	21.02	20.90	21.08	21.5
GPRS (GMSK, 1 Tx slot) – CS1	30.00	29.87	30.06	30.50	21.00	20.87	21.06	21.5
GPRS (GMSK, 2 Tx slots) – CS1	27.47	27.18	27.60	29.00	21.47	21.18	**21.60**	23.0
GPRS (GMSK, 3 Tx slots) – CS1	26.00	25.82	26.20	27.00	21.74	21.56	21.94	22.74
GPRS (GMSK, 4 Tx slots) – CS1	24.76	24.53	24.86	25.00	21.76	21.53	21.86	22.0
EDGE (8PSK, 1 Tx slot) – MCS5	24.77	24.40	24.89	25.00	15.77	15.40	15.89	16.0
EDGE (8PSK, 2 Tx slots) – MCS5	24.00	23.70	24.36	24.50	18.00	17.70	18.36	18.50
EDGE (8PSK, 3 Tx slots) – MCS5	23.05	22.63	23.18	23.50	18.79	18.37	18.92	19.24
EDGE (8PSK, 4 Tx slots) – MCS5	21.80	21.46	21.92	22.50	18.80	18.46	18.92	19.5

Remark: The frame-averaged power is linearly scaled the maximum burst averaged power over 8 time slots.
The calculated method are shown as below:
Frame-averaged power = Maximum burst averaged power (1 Tx Slot) - 9 dB
Frame-averaged power = Maximum burst averaged power (2 Tx Slots) - 6 dB
Frame-averaged power = Maximum burst averaged power (3 Tx Slots) - 4.26 dB
Frame-averaged power = Maximum burst averaged power (4 Tx Slots) - 3 dB

<WCDMA Conducted Power>

1. The following tests were conducted according to the test requirements outlines in 3GPP TS 34.121 specification.
2. The procedures in KDB 941225 D01v03r01 are applied for 3GPP Rel. 6 HSPA to configure the device in the required sub-test mode(s) to determine SAR test exclusion.

A summary of these settings are illustrated below:

HSDPA Setup Configuration:

a. The EUT was connected to Base Station Agilent E5515C referred to the Setup Configuration.
b. The RF path losses were compensated into the measurements.
c. A call was established between EUT and Base Station with following setting:
   i. Set Gain Factors (β_c and β_d) and parameters were set according to each
   ii. Specific sub-test in the following table, C10.1.4, quoted from the TS 34.121
   iii. Set RMC 12.2Kbps + HSDPA mode.
   iv. Set Cell Power = -86 dBm
   v. Set HS-DSCH Configuration Type to FRC (H-set 1, QPSK)
   vi. Select HSDPA Uplink Parameters
   vii. Set Delta ACK, Delta NACK and Delta CQI = 8
   viii. Set Ack-Nack Repetition Factor to 3
   ix. Set CQI Feedback Cycle (k) to 4 ms
   x. Set CQI Repetition Factor to 2
   xi. Power Ctrl Mode = All Up bits
d. The transmitted maximum output power was recorded.

Table C.10.1.4: β values for transmitter characteristics tests with HS-DPCCH

Sub-test	β_c	β_d	β_d (SF)	β_c/β_d	β_{HS} (Note1, Note 2)	CM (dB) (Note 3)	MPR (dB) (Note 3)
1	2/15	15/15	64	2/15	4/15	0.0	0.0
2	12/15 (Note 4)	15/15 (Note 4)	64	12/15 (Note 4)	24/15	1.0	0.0
3	15/15	8/15	64	15/8	30/15	1.5	0.5
4	15/15	4/15	64	15/4	30/15	1.5	0.5

Note 1: Δ_{ACK}, Δ_{NACK} and Δ_{CQI} = 30/15 with β_{hs} = 30/15 * β_c.

Note 2: For the HS-DPCCH power mask requirement test in clause 5.2C, 5.7A, and the Error Vector Magnitude (EVM) with HS-DPCCH test in clause 5.13.1A, and HSDPA EVM with phase discontinuity in clause 5.13.1AA, Δ_{ACK} and Δ_{NACK} = 30/15 with β_{hs} = 30/15 * β_c, and Δ_{CQI} = 24/15 with β_{hs} = 24/15 * β_c.

Note 3: CM = 1 for β_c/β_d =12/15, β_{hs}/β_c=24/15. For all other combinations of DPDCH, DPCCH and HS-DPCCH the MPR is based on the relative CM difference. This is applicable for only UEs that support HSDPA in release 6 and later releases.

Note 4: For subtest 2 the β_c/β_d ratio of 12/15 for the TFC during the measurement period (TF1, TF0) is achieved by setting the signalled gain factors for the reference TFC (TF1, TF1) to β_c = 11/15 and β_d = 15/15.

Setup Configuration

HSUPA Setup Configuration:

a. The EUT was connected to Base Station Agilent E5515C referred to the Setup Configuration.
b. The RF path losses were compensated into the measurements.
c. A call was established between EUT and Base Station with following setting * :
   i. Call Configs = 5.2B, 5.9B, 5.10B, and 5.13.2B with QPSK
   ii. Set the Gain Factors (β_c and β_d) and parameters (AG Index) were set according to each specific sub-test in the following table, C11.1.3, quoted from the TS 34.121
   iii. Set Cell Power = -86 dBm
   iv. Set Channel Type = 12.2k + HSPA
   v. Set UE Target Power
   vi. Power Ctrl Mode= Alternating bits
   vii. Set and observe the E-TFCI
   viii. Confirm that E-TFCI is equal to the target E-TFCI of 75 for sub-test 1, and other subtest's E-TFCI
d. The transmitted maximum output power was recorded.

Table C.11.1.3: β values for transmitter characteristics tests with HS-DPCCH and E-DCH

Sub-test	β_c	β_d	β_d (SF)	β_c/β_d	β_{HS} (Note1)	β_{ec}	β_{ed} (Note 5) (Note 6)	β_{ed} (SF)	β_{ed} (Codes)	CM (dB) (Note 2)	MPR (dB) (Note 2)	AG Index (Note 6)	E-TFCI
1	11/15 (Note 3)	15/15 (Note 3)	64	11/15 (Note 3)	22/15	209/225	1309/225	4	1	1.0	0.0	20	75
2	6/15	15/15	64	6/15	12/15	12/15	94/75	4	1	3.0	2.0	12	67
3	15/15	9/15	64	15/9	30/15	30/15	$\beta_{ed}1$: 47/15 $\beta_{ed}2$: 47/15	4 4	2	2.0	1.0	15	92
4	2/15	15/15	64	2/15	4/15	2/15	56/75	4	1	3.0	2.0	17	71
5	15/15 (Note 4)	15/15 (Note 4)	64	15/15 (Note 4)	30/15	24/15	134/15	4	1	1.0	0.0	21	81

Note 1: Δ_{ACK}, Δ_{NACK} and Δ_{CQI} = 30/15 with β_{hs} = 30/15 * β_c .
Note 2: CM = 1 for β_c/β_d =12/15, β_{hs}/β_c=24/15. For all other combinations of DPDCH, DPCCH, HS- DPCCH, E-DPDCH and E-DPCCH the MPR is based on the relative CM difference.
Note 3: For subtest 1 the β_c/β_d ratio of 11/15 for the TFC during the measurement period (TF1, TF0) is achieved by setting the signalled gain factors for the reference TFC (TF1, TF1) to β_c = 10/15 and β_d = 15/15.
Note 4: For subtest 5 the β_c/β_d ratio of 15/15 for the TFC during the measurement period (TF1, TF0) is achieved by setting the signalled gain factors for the reference TFC (TF1, TF1) to β_c = 14/15 and β_d = 15/15.
Note 5: In case of testing by UE using E-DPDCH Physical Layer category 1, Sub-test 3 is omitted according to TS25.306 Table 5.1g.
Note 6: β_{ed} can not be set directly, it is set by Absolute Grant Value.

Setup Configuration

<WCDMA Conducted Power>

General Note:

1. Per KDB 941225 D01v03r01, SAR for Head / Hotspot / Body-worn exposure is measured using a 12.2 kbps RMC with TPC bits configured to all "1's".
2. Per KDB 941225 D01v03r01, RMC 12.2kbps setting is used to evaluate SAR. If the maximum output power and tune-up tolerance specified for production units in HSDPA / HSUPA is ≤ ¼ dB higher than RMC 12.2Kbps or when the highest reported SAR of the RMC12.2Kbps is scaled by the ratio of specified maximum output power and tune-up tolerance of HSDPA / HSUPA to RMC12.2Kbps and the adjusted SAR is ≤ 1.2 W/kg, SAR measurement is not required for HSDPA / HSUPA.

SIM1:

Band			WCDMA Band V			WCDMA Band II			WCDMA Band IV		
TX Channel			4132	4182	4233	9262	9400	9538	1312	1413	1513
Rx Channel			4357	4407	4458	9662	9800	9938	1537	1638	1738
Frequency (MHz)			826.4	836.4	846.6	1852.4	1880	1907.6	1712.4	1732.6	1752.6
MPR (dB)	3GPP Rel 99	AMR 12.2Kbps	23.05	22.98	22.89	22.08	21.88	22.37	21.85	21.81	22.27
	3GPP Rel 99	RMC 12.2Kbps	**23.06**	22.99	22.90	22.09	21.89	**22.39**	21.86	21.82	**22.28**
0	3GPP Rel 6	HSDPA Subtest-1	21.79	21.77	21.77	20.40	20.40	20.78	20.35	20.28	20.94
0	3GPP Rel 6	HSDPA Subtest-2	21.82	21.78	21.87	20.42	20.43	20.79	20.35	20.27	20.91
0.5	3GPP Rel 6	HSDPA Subtest-3	21.29	21.27	21.35	19.83	19.87	20.36	19.91	19.84	20.47
0.5	3GPP Rel 6	HSDPA Subtest-4	21.30	21.27	21.36	19.79	19.84	20.34	19.90	19.95	20.46
0	3GPP Rel 6	HSUPA Subtest-1	21.23	21.05	21.81	20.38	20.09	20.99	20.07	20.26	20.50
2	3GPP Rel 6	HSUPA Subtest-2	20.88	20.41	20.41	19.00	19.05	19.69	19.44	19.35	19.83
1	3GPP Rel 6	HSUPA Subtest-3	20.56	20.49	20.51	19.09	19.01	19.95	19.00	19.12	19.55
2	3GPP Rel 6	HSUPA Subtest-4	20.72	20.80	20.89	20.06	19.38	20.02	19.59	19.42	20.13
0	3GPP Rel 6	HSUPA Subtest-5	21.80	22.00	21.80	20.50	20.40	20.90	20.50	20.50	21.00

SIM2:

Band			WCDMA Band V			WCDMA Band II			WCDMA Band IV		
TX Channel			4132	4182	4233	9262	9400	9538	1312	1413	1513
Rx Channel			4357	4407	4458	9662	9800	9938	1537	1638	1738
Frequency (MHz)			826.4	836.4	846.6	1852.4	1880	1907.6	1712.4	1732.6	1752.6
MPR (dB)	3GPP Rel 99	AMR 12.2Kbps	23.03	22.95	22.87	22.07	21.85	22.34	21.84	21.79	22.25
	3GPP Rel 99	RMC 12.2Kbps	**23.04**	22.96	22.88	22.08	21.86	**22.35**	21.85	21.80	**22.26**
0	3GPP Rel 6	HSDPA Subtest-1	21.78	21.76	21.76	20.39	20.38	20.76	20.34	20.26	20.93
0	3GPP Rel 6	HSDPA Subtest-2	21.80	21.77	21.85	20.40	20.42	20.78	20.32	20.25	20.90
0.5	3GPP Rel 6	HSDPA Subtest-3	21.26	21.25	21.34	19.82	19.85	20.35	19.90	19.83	20.45
0.5	3GPP Rel 6	HSDPA Subtest-4	21.29	21.26	21.33	19.77	19.83	20.32	19.89	19.94	20.44
0	3GPP Rel 6	HSUPA Subtest-1	21.22	21.04	21.80	20.36	20.06	20.96	20.05	20.24	20.48
2	3GPP Rel 6	HSUPA Subtest-2	20.85	20.40	20.40	18.90	19.04	19.67	19.42	19.32	19.80
1	3GPP Rel 6	HSUPA Subtest-3	20.54	20.46	20.49	19.06	19.00	19.92	18.98	19.10	19.54
2	3GPP Rel 6	HSUPA Subtest-4	20.71	20.78	20.88	20.05	19.36	20.00	19.56	19.41	20.12
0	3GPP Rel 6	HSUPA Subtest-5	21.79	21.99	21.78	20.49	20.38	20.89	20.48	20.49	20.89

<LTE Conducted Power>

General Note:

1. Anritsu MT8820C base station simulator was used to setup the connection with EUT; the frequency band, channel bandwidth, RB allocation configuration, modulation type are set in the base station simulator to configure EUT transmitting at maximum power and at different configurations which are requested to be reported to FCC, for conducted power measurement and SAR testing.
2. Per KDB 941225 D05v02r04, when a properly configured base station simulator is used for the SAR and power measurements, spectrum plots for each RB allocation and offset configuration is not required.
3. Per KDB 941225 D05v02r04, start with the largest channel bandwidth and measure SAR for QPSK with 1 RB allocation, using the RB offset and required test channel combination with the highest maximum output power for RB offsets at the upper edge, middle and lower edge of each required test channel.
4. Per KDB 941225 D05v02r04, 50% RB allocation for QPSK SAR testing follows 1RB QPSK allocation procedure.
5. Per KDB 941225 D05v02r04, For QPSK with 100% RB allocation, SAR is not required when the highest maximum output power for 100 % RB allocation is less than the highest maximum output power in 50% and 1 RB allocations and the highest reported SAR for 1 RB and 50% RB allocation are ≤ 0.8 W/kg. Otherwise, SAR is measured for the highest output power channel; and if the reported SAR is > 1.45 W/kg, the remaining required test channels must also be tested.
6. Per KDB 941225 D05v02r04, 16QAM output power for each RB allocation configuration is > not ½ dB higher than the same configuration in QPSK and the reported SAR for the QPSK configuration is ≤ 1.45 W/kg; Per KDB 941225 D05v02r04, 16QAM SAR testing is not required.
7. Per KDB 941225 D05v02r04, Smaller bandwidth output power for each RB allocation configuration is > not ½ dB higher than the same configuration in the largest supported bandwidth, and the reported SAR for the largest supported bandwidth is ≤ 1.45 W/kg; Per KDB 941225 D05v02r04, smaller bandwidth SAR testing is not required.

<LTE Band 17 >

BW [MHz]	Modulation	RB Size	RB Offset	Power Low Ch. / Freq.	Power Middle Ch. / Freq.	Power High Ch. / Freq.	Tune up Limit (dBm)	MPR (dB)
Channel				23780	23790	23800		
Frequency (MHz)				709	710	711		
10	QPSK	1	0	21.97	21.97	22.08	22.5	0
10	QPSK	1	24	**22.21**	22.06	22.16		
10	QPSK	1	49	22.15	22.01	21.78		
10	QPSK	25	0	21.10	21.15	21.04	21.5	0-1
10	QPSK	25	12	21.22	21.16	21.23		
10	QPSK	25	24	21.32	21.19	21.24		
10	QPSK	50	0	21.10	21.00	21.09		
10	16QAM	1	0	20.90	20.95	20.94	21.5	0-1
10	16QAM	1	24	20.98	20.78	20.93		
10	16QAM	1	49	20.90	21.03	20.81		
10	16QAM	25	0	20.01	20.26	20.29	20.5	0-2
10	16QAM	25	12	20.20	20.17	20.35		
10	16QAM	25	24	20.32	20.17	20.18		
10	16QAM	50	0	20.16	20.16	20.14		
Channel				23755	23790	23825	Tune up Limit (dBm)	MPR (dB)
Frequency (MHz)				706.5	710	713.5		
5	QPSK	1	0	21.85	22.04	22.05	22.5	0
5	QPSK	1	12	21.80	21.94	21.74		
5	QPSK	1	24	21.94	22.02	21.80		
5	QPSK	12	0	21.05	21.17	21.13	21.5	0-1
5	QPSK	12	6	21.17	21.04	21.12		
5	QPSK	12	11	21.13	21.17	21.01		
5	QPSK	25	0	21.08	21.08	21.06		
5	16QAM	1	0	21.00	21.05	21.05	21.5	0-1
5	16QAM	1	12	21.00	21.19	20.95		
5	16QAM	1	24	21.02	21.18	20.94		
5	16QAM	12	0	20.05	20.25	20.17	20.5	0-2
5	16QAM	12	6	20.26	20.36	20.17		
5	16QAM	12	11	20.47	20.25	20.19		
5	16QAM	25	0	20.28	20.33	20.24		

Note: According to 447498D01v06, formula for required test channels , only one channel evaluated for SAR compliance.

<LTE Band 4>

BW [MHz]	Modulation	RB Size	RB Offset	Power Low Ch. / Freq.	Power Middle Ch. / Freq.	Power High Ch. / Freq.	Tune up Limit (dBm)	MPR (dB)
Channel				20050	20175	20300		
Frequency (MHz)				1720	1732.5	1745		
20	QPSK	1	0	22.10	22.29	22.38	23.0	0
20	QPSK	1	49	22.09	22.21	22.26		
20	QPSK	1	99	22.04	22.28	22.08		
20	QPSK	50	0	21.06	21.14	21.19	22.0	0-1
20	QPSK	50	24	20.98	21.08	21.20		
20	QPSK	50	49	21.08	21.15	21.25		
20	QPSK	100	0	21.11	21.19	21.21		
20	16QAM	1	0	21.17	21.49	21.34	22.0	0-1
20	16QAM	1	49	21.24	21.30	21.29		
20	16QAM	1	99	21.04	21.18	21.19		
20	16QAM	50	0	20.09	20.07	20.17	21.0	0-2
20	16QAM	50	24	20.02	20.18	20.27		
20	16QAM	50	49	20.00	20.11	20.35		
20	16QAM	100	0	20.10	20.16	20.27		
Channel				20025	20175	20325	Tune up Limit (dBm)	MPR (dB)
Frequency (MHz)				1717.5	1732.5	1747.5		
15	QPSK	1	0	22.00	22.01	22.28	23.0	0
15	QPSK	1	37	22.01	22.26	22.36		
15	QPSK	1	74	21.98	22.18	22.19		
15	QPSK	36	0	20.92	21.32	21.35	22.0	0-1
15	QPSK	36	18	21.09	21.21	21.36		
15	QPSK	36	37	21.11	21.24	21.31		
15	QPSK	75	0	21.07	21.23	21.24		
15	16QAM	1	0	20.62	20.86	20.96	22.0	0-1
15	16QAM	1	37	20.81	20.87	21.08		
15	16QAM	1	74	20.66	20.69	21.02		
15	16QAM	36	0	20.11	20.26	20.37	21.0	0-2
15	16QAM	36	18	20.18	20.29	20.40		
15	16QAM	36	37	20.24	20.35	20.35		
15	16QAM	75	0	20.04	20.15	20.33		
Channel				20000	20175	20350	Tune up Limit (dBm)	MPR (dB)
Frequency (MHz)				1715	1732.5	1750		
10	QPSK	1	0	21.96	22.19	22.25	23.0	0
10	QPSK	1	24	22.02	22.21	22.30		
10	QPSK	1	49	22.04	22.13	21.98		
10	QPSK	25	0	21.01	21.17	21.25	22.0	0-1
10	QPSK	25	12	21.02	21.09	21.22		
10	QPSK	25	24	21.05	21.08	21.10		
10	QPSK	50	0	21.07	21.09	21.10		
10	16QAM	1	0	21.16	21.28	21.44	22.0	0-1
10	16QAM	1	24	21.26	21.32	21.51		
10	16QAM	1	49	21.38	21.28	21.18		
10	16QAM	25	0	19.96	20.24	20.26	21.0	0-2
10	16QAM	25	12	19.97	20.26	20.33		
10	16QAM	25	24	20.06	20.35	20.28		
10	16QAM	50	0	20.14	20.32	20.26		

Channel				19975	20175	20375	Tune up Limit (dBm)	MPR (dB)
Frequency (MHz)				1712.5	1732.5	1752.5		
5	QPSK	1	0	21.92	22.14	22.03	23.0	0
5	QPSK	1	12	21.99	22.25	22.15		
5	QPSK	1	24	22.04	22.09	21.91		
5	QPSK	12	0	21.01	21.23	21.12	22.0	0-1
5	QPSK	12	6	20.95	21.10	21.21		
5	QPSK	12	11	20.93	21.14	21.10		
5	QPSK	25	0	21.05	21.12	21.16		
5	16QAM	1	0	21.19	21.15	21.27	22.0	0-1
5	16QAM	1	12	21.21	21.40	21.37		
5	16QAM	1	24	21.22	21.29	21.11		
5	16QAM	12	0	20.14	20.27	20.15	21.0	0-2
5	16QAM	12	6	20.14	20.24	20.37		
5	16QAM	12	11	20.06	20.27	20.18		
5	16QAM	25	0	20.05	20.20	20.30		
Channel				19965	20175	20385	Tune up Limit (dBm)	MPR (dB)
Frequency (MHz)				1711.5	1732.5	1753.5		
3	QPSK	1	0	21.96	22.14	22.20	23.0	0
3	QPSK	1	7	21.94	22.24	22.02		
3	QPSK	1	14	22.07	22.15	21.96		
3	QPSK	8	0	21.06	21.27	21.04	22.0	0-1
3	QPSK	8	4	21.02	21.19	21.00		
3	QPSK	8	7	20.98	21.26	21.11		
3	QPSK	15	0	21.02	21.10	21.18		
3	16QAM	1	0	20.87	21.42	21.49	22.0	0-1
3	16QAM	1	7	20.93	21.69	21.34		
3	16QAM	1	14	20.91	21.42	21.24		
3	16QAM	8	0	20.02	20.29	20.21	21.0	0-2
3	16QAM	8	4	20.00	20.22	20.16		
3	16QAM	8	7	20.00	20.30	20.14		
3	16QAM	15	0	20.08	20.37	20.34		
Channel				19957	20175	20393	Tune up Limit (dBm)	MPR (dB)
Frequency (MHz)				1710.7	1732.5	1754.3		
1.4	QPSK	1	0	21.98	22.09	22.12	23.0	0
1.4	QPSK	1	2	22.02	22.18	22.05		
1.4	QPSK	1	5	21.90	22.27	22.17		
1.4	QPSK	3	0	21.90	22.14	22.13		
1.4	QPSK	3	1	22.05	22.20	22.15		
1.4	QPSK	3	2	22.01	22.21	22.12		
1.4	QPSK	6	0	20.98	21.17	21.00	22.0	0-1
1.4	16QAM	1	0	20.93	21.06	21.12	22.0	0-1
1.4	16QAM	1	2	21.00	21.17	20.94		
1.4	16QAM	1	5	20.94	21.21	21.54		
1.4	16QAM	3	0	21.03	21.20	21.03		
1.4	16QAM	3	1	21.04	21.13	20.98		
1.4	16QAM	3	2	21.02	21.15	21.02		
1.4	16QAM	6	0	20.02	20.24	20.22	21.0	0-2

<LTE Band 7>

BW [MHz]	Modulation	RB Size	RB Offset	Power Low Ch. / Freq.	Power Middle Ch. / Freq.	Power High Ch. / Freq.	Tune up Limit (dBm)	MPR (dB)
Channel				20850	21100	21350		
Frequency (MHz)				2510	2535	2560		
20	QPSK	1	0	20.47	20.79	20.74	22.0	0
20	QPSK	1	49	20.56	20.90	20.68		
20	QPSK	1	99	20.67	**21.15**	20.75		
20	QPSK	50	0	19.57	19.87	20.04	21.0	0-1
20	QPSK	50	24	19.64	20.11	19.96		
20	QPSK	50	49	19.69	20.12	20.07		
20	QPSK	100	0	19.81	20.07	19.87		
20	16QAM	1	0	19.26	19.84	19.70	21.0	0-1
20	16QAM	1	49	19.84	20.01	19.60		
20	16QAM	1	99	19.96	20.46	19.71		
20	16QAM	50	0	18.52	19.12	19.05	20.0	0-2
20	16QAM	50	24	18.72	19.06	19.09		
20	16QAM	50	49	18.87	19.05	18.92		
20	16QAM	100	0	18.71	19.15	18.99		
Channel				20825	21100	21375	Tune up Limit (dBm)	MPR (dB)
Frequency (MHz)				2507.5	2535	2562.5		
15	QPSK	1	0	20.42	20.87	20.70	22.0	0
15	QPSK	1	37	20.62	21.14	20.68		
15	QPSK	1	74	20.65	21.07	20.66		
15	QPSK	36	0	19.46	20.27	19.97	21.0	0-1
15	QPSK	36	18	19.52	20.14	19.74		
15	QPSK	36	37	19.76	20.07	19.79		
15	QPSK	75	0	19.59	20.10	19.81		
15	16QAM	1	0	19.60	20.21	20.18	21.0	0-1
15	16QAM	1	37	19.83	20.40	19.98		
15	16QAM	1	74	20.03	19.59	19.95		
15	16QAM	36	0	18.68	19.33	18.88	20.0	0-2
15	16QAM	36	18	18.68	19.30	18.94		
15	16QAM	36	37	18.83	19.23	18.91		
15	16QAM	75	0	18.47	19.24	19.09		
Channel				20800	21100	21400	Tune up Limit (dBm)	MPR (dB)
Frequency (MHz)				2505	2535	2565		
10	QPSK	1	0	20.26	20.69	20.71	22.0	0
10	QPSK	1	24	20.24	20.81	20.70		
10	QPSK	1	49	20.43	21.09	20.69		
10	QPSK	25	0	19.34	20.05	19.79	21.0	0-1
10	QPSK	25	12	19.46	20.11	19.85		
10	QPSK	25	24	19.51	20.12	19.81		
10	QPSK	50	0	19.55	20.11	19.78		
10	16QAM	1	0	19.47	20.16	19.89	21.0	0-1
10	16QAM	1	24	19.66	20.38	20.04		
10	16QAM	1	49	19.72	20.39	20.05		
10	16QAM	25	0	18.36	19.34	18.95	20.0	0-2
10	16QAM	25	12	18.72	19.96	18.89		
10	16QAM	25	24	18.81	19.05	18.85		
10	16QAM	50	0	18.62	19.25	18.91		

Channel				20775	21100	21425	Tune up Limit (dBm)	MPR (dB)
Frequency (MHz)				2502.5	2535	2567.5		
5	QPSK	1	0	20.20	20.83	20.71	22.0	0
5	QPSK	1	12	20.20	20.93	20.60		
5	QPSK	1	24	20.29	21.12	20.63		
5	QPSK	12	0	19.16	20.16	19.77	21.0	0-1
5	QPSK	12	6	19.22	20.15	19.93		
5	QPSK	12	11	19.49	20.16	19.88		
5	QPSK	25	0	19.34	20.05	19.79		
5	16QAM	1	0	19.19	20.27	20.05	21.0	0-1
5	16QAM	1	12	19.29	20.33	20.01		
5	16QAM	1	24	19.69	20.45	20.01		
5	16QAM	12	0	18.50	19.02	18.81	20.0	0-2
5	16QAM	12	6	18.46	19.11	18.84		
5	16QAM	12	11	18.42	19.19	18.84		
5	16QAM	25	0	18.43	19.35	18.84		

<WLAN Conducted Power>

General Note:

1. Per KDB 248227 D01v02r02, SAR test reduction is determined according to 802.11 transmission mode configurations and certain exposure conditions with multiple test positions. In the 2.4 GHz band, separate SAR procedures are applied to DSSS and OFDM configurations to simplify DSSS test requirements. For OFDM, in 2.4 band, an initial test configuration must be determined for each standalone and aggregated frequency band, according to the transmission mode configuration with the highest maximum output power specified for production units to perform SAR measurements. If the same highest maximum output power applies to different combinations of channel bandwidths, modulations and data rates, additional procedures are applied to determine which test configurations require SAR measurement. When applicable, an initial test position may be applied to reduce the number of SAR measurements required for next to the ear, UMPC mini-tablet or hotspot mode configurations with multiple test positions.
2. For 2.4 GHz 802.11b DSSS, either the initial test position procedure for multiple exposure test positions or the DSSS procedure for fixed exposure position is applied; these are mutually exclusive. For 2.4 GHz OFDM configurations, the initial test configuration is applied to measure SAR using either the initial test position procedure for multiple exposure test position configurations or the initial test configuration procedures for fixed exposure test conditions. Based on the reported SAR of the measured configurations and maximum output power of the transmission mode configurations that are not included in the initial test configuration, the subsequent test configuration and initial test position procedures are applied to determine if SAR measurements are required for the remaining OFDM transmission configurations. In general, the number of test channels that require SAR measurement is minimized based on maximum output power measured for the test sample(s).
3. For OFDM transmission configurations in the 2.4 GHz band, When the same maximum power is specified for multiple transmission modes in a frequency band, the largest channel bandwidth, lowest order modulation, lowest data rate and lowest order 802.11g/n mode is used for SAR measurement, on the highest measured output power channel for each frequency band.
4. DSSS and OFDM configurations are considered separately according to the required SAR procedures. SAR is measured in the initial test position using the 802.11 transmission mode configuration required by the DSSS procedure or initial test configuration and subsequent test configuration(s) according to the OFDM procedures.18 The initial test position procedure is described in the following:
   a. When the reported SAR of the initial test position is ≤ 0.4 W/kg, further SAR measurement is not required for the other test positions in that exposure configuration and 802.11 transmission mode combinations within the frequency band or aggregated band.
   b. When the reported SAR of the test position is > 0.4 W/kg, SAR is repeated for the 802.11 transmission mode configuration tested in the initial test position to measure the subsequent next closet/smallest test separation distance and maximum coupling test position on the highest maximum output power channel, until the report SAR is ≤ 0.8 W/kg or all required test position are tested.
   c. For all positions/configurations, when the reported SAR is > 0.8 W/kg, SAR is measured for these test positions/configurations on the subsequent next highest measured output power channel(s) until the reported SAR is ≤ 1.2 W/kg or all required channels are tested.

<2.4GHz WLAN>

WLAN 2.4GHz 802.11b Average Power (dBm)						
Power vs. Channel			Power vs. Data Rate			
Channel	Frequency (MHz)	Data Rate 1Mbps	Channel	2Mbps	5.5Mbps	11Mbps
CH 01	2412	8.18	CH 06	12.11	12.08	12.10
CH 06	2437	**12.15**				
CH 11	2462	9.51				

WLAN 2.4GHz 802.11g Average Power (dBm)										
Power vs. Channel			Power vs. Data Rate							
Channel	Frequency (MHz)	Data Rate 6Mbps	Channel	9Mbps	12Mbps	18Mbps	24Mbps	36Mbps	48Mbps	54Mbps
CH 01	2412	7.42	CH 06	11.20	11.16	11.12	11.15	11.11	11.16	11.11
CH 06	2437	**11.24**								
CH 11	2462	8.46								

WLAN 2.4GHz 802.11n HT20 Average Power (dBm)										
Power vs. Channel			Power vs. MCS Index							
Channel	Frequency (MHz)	MCS Index MCS0	Channel	MCS1	MCS2	MCS3	MCS4	MCS5	MCS6	MCS7
CH 01	2412	7.31	CH 06	11.10	11.13	11.14	11.07	11.03	11.05	11.06
CH 06	2437	**11.18**								
CH 11	2462	8.39								

<2.4GHz Bluetooth>

General Note:

1. For 2.4GHz Bluetooth SAR testing was selected 1Mbps, due to its highest average power.
2. The duty factor is selected theoretical 83.3% perform Bluetooth SAR testing.

Mode	Channel	Frequency (MHz)	Average power (dBm)		
			1Mbps	2Mbps	3Mbps
v3.0 with EDR	CH 00	2402	9.16	7.17	7.24
	CH 39	2441	**9.76**	7.67	7.77
	CH 78	2480	7.80	5.91	5.94

Mode	Channel	Frequency (MHz)	Average power (dBm)
			GFSK
v4.0 with LE	CH 00	2402	-0.24
	CH 19	2440	**0.92**
	CH 39	2480	-1.16

13. Antenna Location

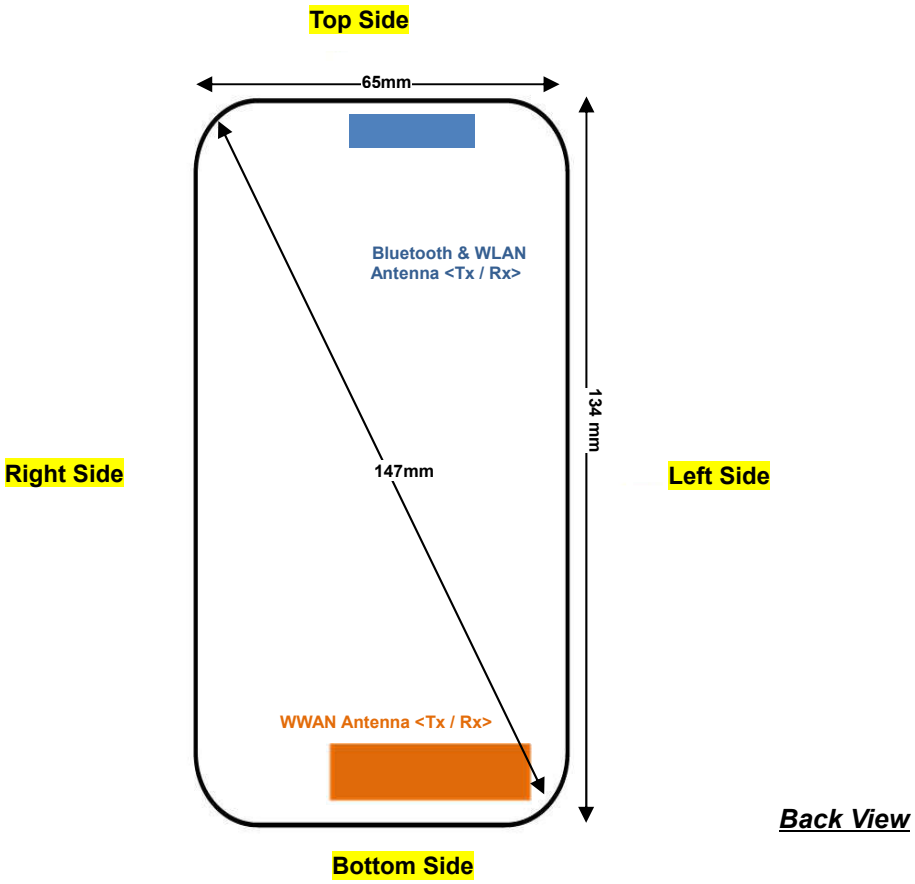

Distance of the Antenna to the EUT surface/edge						
Antennas	Back	Front	Top Side	Bottom Side	Right Side	Left Side
WWAN Main	≤ 25mm	≤ 25mm	125mm	≤ 25mm	27mm	≤ 25mm
BT&WLAN	≤ 25mm	≤ 25mm	≤ 25mm	125mm	29mm	≤ 25mm

Positions for SAR tests; Hotspot mode						
Antennas	Back	Front	Top Side	Bottom Side	Right Side	Left Side
WWAN Main	Yes	Yes	No	Yes	No	Yes
BT&WLAN	Yes	Yes	Yes	No	No	Yes

General Note:
Referring to KDB 941225 D06 v02r01, when the overall device length and width are ≥ 9cm*5cm, the test distance is 10 mm. SAR must be measured for all sides and surfaces with a transmitting antenna located within 25mm from that surface or edge

14. SAR Test Results

General Note:

1. Per KDB 447498 D01v06, the reported SAR is the measured SAR value adjusted for maximum tune-up tolerance.
   a. Tune-up scaling Factor = tune-up limit power (mW) / EUT RF power (mW), where tune-up limit is the maximum rated power among all production units.
   b. For SAR testing of WLAN signal with non-100% duty cycle, the measured SAR is scaled-up by the duty cycle scaling factor which is equal to "1/(duty cycle)"
   c. For WWAN: Reported SAR(W/kg)= Measured SAR(W/kg)*Tune-up Scaling Factor
   d. For WLAN: Reported SAR(W/kg)= Measured SAR(W/kg)* Duty Cycle scaling factor * Tune-up scaling factor
2. Per KDB 447498 D01v06, for each exposure position, testing of other required channels within the operating mode of a frequency band is not required when the *reported* 1-g or 10-g SAR for the mid-band or highest output power channel is:
   - ≤ 0.8 W/kg or 2.0 W/kg, for 1-g or 10-g respectively, when the transmission band is ≤ 100 MHz
   - ≤ 0.6 W/kg or 1.5 W/kg, for 1-g or 10-g respectively, when the transmission band is between 100 MHz and 200 MHz
   - ≤ 0.4 W/kg or 1.0 W/kg, for 1-g or 10-g respectively, when the transmission band is ≥ 200 MHz
3. Pre KDB648474 D04v01r03, when the reported SAR for a body-worn accessory, measured without a headset connected to the handset, is > 1.2 W/kg, the highest reported SAR configuration for that wireless mode and frequency band should be repeated for that body-worn accessory with a headset attached to the handset.
4. Per KDB 941225 D01v03r01, considering the possibility of e.g. 3rd party VoIP operation for Head and body-worn SAR test reduction for GSM and GPRS and EDGE modes is determined by the source-based time-averaged output power including tune-up tolerance. The mode with highest specified time-averaged output power should be tested for SAR compliance in the applicable exposure conditions. For modes with the same specified maximum output power and tolerance, the higher number time-slot configuration should be tested. Therefore, the EUT were set in GPRS (4Tx slots) for GSM850 and GPRS (2Tx slots) for GSM1900.
5. Per KDB 941225 D01v03r01, for Hotspot SAR test reduction for GPRS and EDGE modes is determined by the source-based time-averaged output power including tune-up tolerance, for modes with the same specified maximum output power and tolerance, the higher number time-slot configuration should be tested, therefore, the EUT were set in GPRS (4Tx slots) for GSM850 and GPRS (2Tx slots) for GSM1900.
6. Per KDB 941225 D01v03r01, SAR for next to the ear head / Hotspot / Body-worn exposure is measured using a 12.2 kbps RMC with TPC bits configured to all “1’s”.
7. Per KDB 941225 D01v03r01, RMC 12.2kbps setting is used to evaluate SAR. If the maximum output power and tune-up tolerance specified for production units in HSDPA / HSUPA is ≤ ¼ dB higher than RMC 12.2Kbps or when the highest reported SAR of the RMC12.2Kbps is scaled by the ratio of specified maximum output power and tune-up tolerance of HSDPA / HSUPA to RMC12.2Kbps and the adjusted SAR is ≤ 1.2 W/kg, SAR measurement is not required for HSDPA / HSUPA.
8. Per KDB 941225 D05v02r04, start with the largest channel bandwidth and measure SAR for QPSK with 1 RB allocation, using the RB offset and required test channel combination with the highest maximum output power for RB offsets at the upper edge, middle and lower edge of each required test channel.
9. Per KDB 941225 D05v02r04, 50% RB allocation for QPSK SAR testing follows 1RB QPSK allocation procedure.
10. Per KDB 941225 D05v02r04, For QPSK with 100% RB allocation, SAR is not required when the highest maximum output power for 100 % RB allocation is less than the highest maximum output power in 50% and 1 RB allocations and the highest reported SAR for 1 RB and 50% RB allocation are ≤ 0.8 W/kg. Otherwise, SAR is measured for the highest output power channel; and if the reported SAR is > 1.45 W/kg, the remaining required test channels must also be tested.
11. Per KDB 941225 D05v02r04, 16QAM output power for each RB allocation configuration is > not ½ dB higher than the same configuration in QPSK and the reported SAR for the QPSK configuration is ≤ 1.45 W/kg; Per KDB 941225 D05v02r04, 16QAM SAR testing is not required.
12. Per KDB 941225 D05v02r04, Smaller bandwidth output power for each RB allocation configuration is > not ½ dB higher than the same configuration in the largest supported bandwidth, and the reported SAR for the largest supported bandwidth is ≤ 1.45 W/kg; Per KDB 941225 D05v02r04, smaller bandwidth SAR testing is not required.
13. Per KDB 248227 D01v02r02, for 802.11g/n SAR testing is not required when the highest reported SAR for DSSS is adjusted by the ratio of OFDM to DSSS specified maximum output power and the adjusted SAR is ≤ 1.2 W/kg.
14. This device 2.4GHz WLAN supports Hotspot operation.

14.1 Head SAR

<GSM SAR>

Plot No.	Band	Mode	Test Position	Ch.	Freq. (MHz)	Average Power (dBm)	Tune-Up Limit (dBm)	Tune-up Scaling Factor	Power Drift (dB)	Measured 1g SAR (W/kg)	Reported 1g SAR (W/kg)
	GSM850	GPRS (4 Tx slots)	Right Cheek	251	848.8	27.91	28.00	1.021	-0.06	0.474	0.484
	GSM850	GPRS (4 Tx slots)	Right Tilted	251	848.8	27.91	28.00	1.021	-0.02	0.356	0.363
	GSM850	GPRS (4 Tx slots)	Left Cheek	251	848.8	27.91	28.00	1.021	0.02	0.563	0.575
	GSM850	GPRS (4 Tx slots)	Left Cheek	128	824.2	27.48	28.00	1.127	-0.03	0.530	0.597
#01	**GSM850**	**GPRS (4 Tx slots)**	**Left Cheek**	**189**	**836.4**	**27.71**	**28.00**	**1.069**	**0**	**0.568**	**0.607**
	GSM850	GPRS (4 Tx slots)	Left Tilted	251	848.8	27.91	28.00	1.021	-0.03	0.481	0.491
	GSM1900	GPRS (2 Tx slots)	Right Cheek	810	1909.8	27.61	29.00	1.377	0.03	0.117	0.161
	GSM1900	GPRS (2 Tx slots)	Right Tilted	810	1909.8	27.61	29.00	1.377	0.15	0.038	0.052
#02	**GSM1900**	**GPRS (2 Tx slots)**	**Left Cheek**	**810**	**1909.8**	**27.61**	**29.00**	**1.377**	**0.06**	**0.145**	**0.200**
	GSM1900	GPRS (2 Tx slots)	Left Cheek	512	1850.2	27.61	29.00	1.377	-0.03	0.143	0.197
	GSM1900	GPRS (2 Tx slots)	Left Cheek	661	1880	27.48	29.00	1.419	0.08	0.126	0.179
	GSM1900	GPRS (2 Tx slots)	Left Tilted	810	1909.8	27.19	29.00	1.517	0.12	0.058	0.088

<WCDMA SAR>

Plot No.	Band	Mode	Test Position	Ch.	Freq. (MHz)	Average Power (dBm)	Tune-Up Limit (dBm)	Tune-up Scaling Factor	Power Drift (dB)	Measured 1g SAR (W/kg)	Reported 1g SAR (W/kg)
	WCDMA Band V	RMC 12.2Kbps	Right Cheek	4132	826.4	23.06	23.50	1.107	0	0.225	0.249
	WCDMA Band V	RMC 12.2Kbps	Right Tilted	4132	826.4	23.06	23.50	1.107	0.09	0.169	0.187
#03	**WCDMA Band V**	**RMC 12.2Kbps**	**Left Cheek**	**4132**	**826.4**	**23.06**	**23.50**	**1.107**	**0.05**	**0.273**	**0.302**
	WCDMA Band V	RMC 12.2Kbps	Left Cheek	4182	836.4	22.99	23.50	1.125	-0.08	0.261	0.294
	WCDMA Band V	RMC 12.2Kbps	Left Cheek	4233	846.6	22.90	23.50	1.148	0.1	0.254	0.292
	WCDMA Band V	RMC 12.2Kbps	Left Tilted	4132	826.4	23.06	23.50	1.107	0.06	0.220	0.243
	WCDMA Band IV	RMC 12.2Kbps	Right Cheek	1513	1752.6	22.28	23.50	1.324	-0.01	0.247	0.327
	WCDMA Band IV	RMC 12.2Kbps	Right Tilted	1513	1752.6	22.28	23.50	1.324	0.11	0.082	0.109
	WCDMA Band IV	RMC 12.2Kbps	Left Cheek	1513	1752.6	22.28	23.50	1.324	-0.04	0.252	0.334
#04	**WCDMA Band IV**	**RMC 12.2Kbps**	**Left Cheek**	**1312**	**1712.4**	**21.86**	**23.50**	**1.459**	**0.02**	**0.238**	**0.347**
	WCDMA Band IV	RMC 12.2Kbps	Left Cheek	1413	1732.6	21.82	23.50	1.472	-0.04	0.235	0.346
	WCDMA Band IV	RMC 12.2Kbps	Left Tilted	1513	1752.6	22.28	23.50	1.324	0.01	0.124	0.164
	WCDMA Band II	RMC 12.2Kbps	Right Cheek	9538	1907.6	22.39	23.50	1.291	-0.03	0.188	0.243
	WCDMA Band II	RMC 12.2Kbps	Right Tilted	9538	1907.6	22.39	23.50	1.291	0.17	0.066	0.085
#05	**WCDMA Band II**	**RMC 12.2Kbps**	**Left Cheek**	**9538**	**1907.6**	**22.39**	**23.50**	**1.291**	**-0.03**	**0.255**	**0.329**
	WCDMA Band II	RMC 12.2Kbps	Left Cheek	9262	1852.4	22.09	23.50	1.384	0.1	0.225	0.311
	WCDMA Band II	RMC 12.2Kbps	Left Cheek	9400	1880	21.89	23.50	1.449	0.11	0.221	0.320
	WCDMA Band II	RMC 12.2Kbps	Left Tilted	9538	1907.6	22.39	23.50	1.291	0.13	0.090	0.116

<LTE SAR>

Plot No.	Band	BW (MHz)	RB Size	RB offest	Modulation	Test Position	Ch.	Freq. (MHz)	Average Power (dBm)	Tune-Up Limit (dBm)	Tune-up Scaling Factor	Power Drift (dB)	Measured 1g SAR (W/kg)	Reported 1g SAR (W/kg)
	LTE Band 17	10M	1	24	QPSK	Right Cheek	23780	709	22.21	22.50	1.069	0.05	0.196	0.210
	LTE Band 17	10M	25	24	QPSK	Right Cheek	23780	709	21.32	21.50	1.042	0.01	0.154	0.161
	LTE Band 17	10M	1	24	QPSK	Right Tilted	23780	709	22.21	22.50	1.069	0.19	0.120	0.128
	LTE Band 17	10M	25	24	QPSK	Right Tilted	23780	709	21.32	21.50	1.042	0.02	0.091	0.095
#06	**LTE Band 17**	**10M**	**1**	**24**	**QPSK**	**Left Cheek**	**23780**	**709**	**22.21**	**22.50**	**1.069**	**0.14**	**0.234**	**0.250**
	LTE Band 17	10M	25	24	QPSK	Left Cheek	23780	709	21.32	21.50	1.042	0.01	0.186	0.194
	LTE Band 17	10M	1	24	QPSK	Left Tilted	23780	709	22.21	22.50	1.069	0.06	0.129	0.138
	LTE Band 17	10M	25	24	QPSK	Left Tilted	23780	709	21.32	21.50	1.042	0.09	0.097	0.101
	LTE Band 4	20M	1	0	QPSK	Right Cheek	20300	1745	22.38	23.00	1.153	0.11	0.269	0.310
#07	**LTE Band 4**	**20M**	**1**	**0**	**QPSK**	**Right Cheek**	**20050**	**1720**	**22.10**	**23.00**	**1.230**	**0.05**	**0.268**	**0.330**
	LTE Band 4	20M	1	0	QPSK	Right Cheek	20175	1732.5	22.29	23.00	1.178	0.01	0.257	0.303
	LTE Band 4	20M	50	49	QPSK	Right Cheek	20300	1745	21.25	22.00	1.189	0.04	0.218	0.259
	LTE Band 4	20M	1	0	QPSK	Right Tilted	20300	1745	22.38	23.00	1.153	0.12	0.113	0.130
	LTE Band 4	20M	50	49	QPSK	Right Tilted	20300	1745	21.25	22.00	1.189	0.11	0.084	0.100
	LTE Band 4	20M	1	0	QPSK	Left Cheek	20300	1745	22.38	23.00	1.153	0.06	0.258	0.298
	LTE Band 4	20M	50	49	QPSK	Left Cheek	20300	1745	21.25	22.00	1.189	0.02	0.221	0.263
	LTE Band 4	20M	1	0	QPSK	Left Tilted	20300	1745	22.38	23.00	1.153	0.01	0.150	0.173
	LTE Band 4	20M	50	49	QPSK	Left Tilted	20300	1745	21.25	22.00	1.189	0.07	0.115	0.137
	LTE Band 7	20M	1	99	QPSK	Right Cheek	21100	2535	21.15	22.00	1.216	-0.12	0.123	0.150
	LTE Band 7	20M	50	49	QPSK	Right Cheek	21100	2535	20.12	21.00	1.225	-0.12	0.095	0.116
	LTE Band 7	20M	1	99	QPSK	Right Tilted	21100	2535	21.15	22.00	1.216	0.09	0.048	0.058
	LTE Band 7	20M	50	49	QPSK	Right Tilted	21100	2535	20.12	21.00	1.225	0.12	0.028	0.034
	LTE Band 7	20M	1	99	QPSK	Left Cheek	21100	2535	21.15	22.00	1.216	-0.05	0.185	0.225
#08	**LTE Band 7**	**20M**	**1**	**99**	**QPSK**	**Left Cheek**	**20850**	**2510**	**20.67**	**22.00**	**1.358**	**0.03**	**0.185**	**0.251**
	LTE Band 7	20M	1	99	QPSK	Left Cheek	21350	2560	20.75	22.00	1.334	0.02	0.157	0.209
	LTE Band 7	20M	50	49	QPSK	Left Cheek	21100	2535	20.12	21.00	1.225	0.12	0.123	0.151
	LTE Band 7	20M	1	99	QPSK	Left Tilted	21100	2535	21.15	22.00	1.216	-0.15	0.036	0.044
	LTE Band 7	20M	50	49	QPSK	Left Tilted	21100	2535	20.12	21.00	1.225	-0.1	0.027	0.033

<DTS WLAN SAR>

Plot No.	Band	Mode	Test Position	Ch.	Freq. (MHz)	Average Power (dBm)	Tune-Up Limit (dBm)	Tune-up Scaling Factor	Duty Cycle %	Duty Cycle Scaling Factor	Power Drift (dB)	Measured 1g SAR (W/kg)	Reported 1g SAR (W/kg)
	WLAN 2.4GHz	802.11b 1Mbps	Right Cheek	6	2437	12.15	13.00	1.216	97.64	1.024	-0.02	0.076	0.095
	WLAN 2.4GHz	802.11b 1Mbps	Right Tilted	6	2437	12.15	13.00	1.216	97.64	1.024	0.15	0.089	0.111
	WLAN 2.4GHz	802.11b 1Mbps	Left Cheek	6	2437	12.15	13.00	1.216	97.64	1.024	-0.16	0.076	0.095
#09	**WLAN 2.4GHz**	**802.11b 1Mbps**	**Left Tilted**	**6**	**2437**	**12.15**	**13.00**	**1.216**	**97.64**	**1.024**	**-0.14**	**0.090**	**0.112**
	WLAN 2.4GHz	802.11b 1Mbps	Left Tilted	1	2412	8.18	10.00	1.521	97.64	1.024	0.13	0.026	0.040
	WLAN 2.4GHz	802.11b 1Mbps	Left Tilted	11	2462	9.51	10.00	1.119	97.64	1.024	-0.16	0.067	0.077

<DSS Bluetooth SAR>

Plot No.	Band	Mode	Test Position	Ch.	Freq. (MHz)	Average Power (dBm)	Tune-Up Limit (dBm)	Tune-up Scaling Factor	Power Drift (dB)	Measured 1g SAR (W/kg)	Reported 1g SAR (W/kg)
	Bluetooth	DH5	Right Cheek	39	2441	9.76	10.00	1.057	-0.1	0.016	0.017
#10	**Bluetooth**	**DH5**	**Right Tilted**	**39**	**2441**	**9.76**	**10.00**	**1.057**	**-0.14**	**0.060**	**0.063**
	Bluetooth	DH5	Right Tilted	0	2402	9.16	10.00	1.213	0.19	0.034	0.041
	Bluetooth	DH5	Right Tilted	78	2480	7.80	9.50	1.479	0.16	0.033	0.049
	Bluetooth	DH5	Left Cheek	39	2441	9.76	10.00	1.057	0.16	0.043	0.045
	Bluetooth	DH5	Left Tilted	39	2441	9.76	10.00	1.057	0.02	0.057	0.060

14.2 Hotspot SAR

Distance of the Antenna to the EUT surface/edge						
Antennas	Back	Front	Top Side	Bottom Side	Right Side	Left Side
WWAN Main	≤ 25mm	≤ 25mm	125mm	≤ 25mm	27mm	≤ 25mm
BT&WLAN	≤ 25mm	≤ 25mm	≤ 25mm	125mm	29mm	≤ 25mm

Positions for SAR tests; Hotspot mode						
Antennas	Back	Front	Top Side	Bottom Side	Right Side	Left Side
WWAN Main	Yes	Yes	No	Yes	No	Yes
BT&WLAN	Yes	Yes	Yes	No	No	Yes

General Note:
Referring to KDB 941225 D06 v02r01, when the overall device length and width are ≥ 9cm*5cm, the test distance is 10 mm. SAR must be measured for all sides and surfaces with a transmitting antenna located within 25mm from that surface or edge

<GSM SAR>

Plot No.	Band	Mode	Test Position	Gap (cm)	Ch.	Freq. (MHz)	Average Power (dBm)	Tune-Up Limit (dBm)	Tune-up Scaling Factor	Power Drift (dB)	Measured 1g SAR (W/kg)	Reported 1g SAR (W/kg)
	GSM850	GPRS (4 Tx slots)	Front	1	251	848.8	27.91	28.00	1.021	-0.04	0.767	0.783
	GSM850	GPRS (4 Tx slots)	Back	1	251	848.8	27.91	28.00	1.021	-0.02	0.979	0.999
#11	**GSM850**	**GPRS (4 Tx slots)**	**Back**	**1**	**128**	**824.2**	**27.48**	**28.00**	**1.127**	**-0.04**	**0.988**	**1.114**
	GSM850	GPRS (4 Tx slots)	Back	1	189	836.4	27.71	28.00	1.069	0.02	0.995	1.064
	GSM850	GPRS (4 Tx slots)	Left Side	1	251	848.8	27.91	28.00	1.021	-0.02	0.888	0.907
	GSM850	GPRS (4 Tx slots)	Left Side	1	128	824.2	27.48	28.00	1.127	-0.01	0.836	0.942
	GSM850	GPRS (4 Tx slots)	Left Side	1	189	836.4	27.71	28.00	1.069	0.02	0.807	0.863
	GSM850	GPRS (4 Tx slots)	Bottom Side	1	251	848.8	27.91	28.00	1.021	0	0.232	0.237
	GSM1900	GPRS (2 Tx slots)	Front	1	810	1909.8	27.61	29.00	1.377	-0.02	0.288	0.397
	GSM1900	GPRS (2 Tx slots)	Back	1	810	1909.8	27.61	29.00	1.377	-0.03	0.619	0.852
	GSM1900	GPRS (2 Tx slots)	Back	1	512	1850.2	27.48	29.00	1.419	0	0.631	0.895
#12	**GSM1900**	**GPRS (2 Tx slots)**	**Back**	**1**	**661**	**1880**	**27.19**	**29.00**	**1.517**	**0.03**	**0.594**	**0.901**
	GSM1900	GPRS (2 Tx slots)	Left Side	1	810	1909.8	27.61	29.00	1.377	0.12	0.070	0.096
	GSM1900	GPRS (2 Tx slots)	Bottom Side	1	810	1909.8	27.61	29.00	1.377	-0.01	0.462	0.636

<WCDMA SAR>

Plot No.	Band	Mode	Test Position	Gap (cm)	Ch.	Freq. (MHz)	Average Power (dBm)	Tune-Up Limit (dBm)	Tune-up Scaling Factor	Power Drift (dB)	Measured 1g SAR (W/kg)	Reported 1g SAR (W/kg)
	WCDMA Band V	RMC 12.2Kbps	Front	1	4132	826.4	23.06	23.50	1.107	0.06	0.365	0.404
#13	**WCDMA Band V**	**RMC 12.2Kbps**	**Back**	**1**	**4132**	**826.4**	**23.06**	**23.50**	**1.107**	**-0.02**	**0.481**	**0.532**
	WCDMA Band V	RMC 12.2Kbps	Back	1	4182	836.4	22.99	23.50	1.125	-0.07	0.442	0.497
	WCDMA Band V	RMC 12.2Kbps	Back	1	4233	846.6	22.90	23.50	1.148	-0.06	0.439	0.504
	WCDMA Band V	RMC 12.2Kbps	Left Side	1	4132	826.4	23.06	23.50	1.107	-0.17	0.455	0.504
	WCDMA Band V	RMC 12.2Kbps	Bottom Side	1	4132	826.4	23.06	23.50	1.107	0.12	0.105	0.116
	WCDMA Band IV	RMC 12.2Kbps	Front	1	1513	1752.6	22.28	23.50	1.324	0.03	0.562	0.744
	WCDMA Band IV	RMC 12.2Kbps	Back	1	1513	1752.6	22.28	23.50	1.324	0.09	0.906	1.200
#14	**WCDMA Band IV**	**RMC 12.2Kbps**	**Back**	**1**	**1312**	**1712.4**	**21.86**	**23.50**	**1.459**	**-0.11**	**0.848**	**1.237**
	WCDMA Band IV	RMC 12.2Kbps	Back	1	1413	1732.6	21.82	23.50	1.472	0.04	0.822	1.210
	WCDMA Band IV	RMC 12.2Kbps	Left Side	1	1513	1752.6	22.28	23.50	1.324	-0.03	0.094	0.124
	WCDMA Band IV	RMC 12.2Kbps	Bottom Side	1	1513	1752.6	22.28	23.50	1.324	0.05	0.884	1.171
	WCDMA Band IV	RMC 12.2Kbps	Bottom Side	1	1312	1712.4	21.86	23.50	1.459	-0.01	0.784	1.144
	WCDMA Band IV	RMC 12.2Kbps	Bottom Side	1	1413	1732.6	21.82	23.50	1.472	0.04	0.777	1.144
	WCDMA Band II	RMC 12.2Kbps	Front	1	9538	1907.6	22.39	23.50	1.291	0.02	0.481	0.621
	WCDMA Band II	RMC 12.2Kbps	Back	1	9538	1907.6	22.39	23.50	1.291	-0.01	0.806	1.041
	WCDMA Band II	RMC 12.2Kbps	Back	1	9262	1852.4	22.09	23.50	1.384	0.03	0.724	1.002
#15	**WCDMA Band II**	**RMC 12.2Kbps**	**Back**	**1**	**9400**	**1880**	**21.89**	**23.50**	**1.449**	**-0.05**	**0.872**	**1.263**
	WCDMA Band II	RMC 12.2Kbps	Left Side	1	9538	1907.6	22.39	23.50	1.291	0.13	0.118	0.152
	WCDMA Band II	RMC 12.2Kbps	Bottom Side	1	9538	1907.6	22.39	23.50	1.291	0.08	0.690	0.891
	WCDMA Band II	RMC 12.2Kbps	Bottom Side	1	9262	1852.4	22.09	23.50	1.384	0.03	0.691	0.956
	WCDMA Band II	RMC 12.2Kbps	Bottom Side	1	9400	1880	21.89	23.50	1.449	0.04	0.615	0.891

<LTE SAR>

Plot No.	Band	BW (MHz)	RB Size	RB offest	Modulation	Test Position	Gap (cm)	Ch.	Freq. (MHz)	Average Power (dBm)	Tune-Up Limit (dBm)	Tune-up Scaling Factor	Power Drift (dB)	Measured 1g SAR (W/kg)	Reported 1g SAR (W/kg)
	LTE Band 17	10M	1	24	QPSK	Front	1	23780	709	22.21	22.50	1.069	-0.09	0.174	0.186
	LTE Band 17	10M	25	24	QPSK	Front	1	23780	709	21.32	21.50	1.042	0.06	0.166	0.173
#16	**LTE Band 17**	**10M**	**1**	**24**	**QPSK**	**Back**	**1**	**23780**	**709**	**22.21**	**22.50**	**1.069**	**-0.01**	**0.206**	**0.220**
	LTE Band 17	10M	25	24	QPSK	Back	1	23780	709	21.32	21.50	1.042	-0.02	0.203	0.212
	LTE Band 17	10M	1	24	QPSK	Left Side	1	23780	709	22.21	22.50	1.069	0	0.172	0.184
	LTE Band 17	10M	25	24	QPSK	Left Side	1	23780	709	21.32	21.50	1.042	0.05	0.165	0.172
	LTE Band 17	10M	1	24	QPSK	Bottom Side	1	23780	709	22.21	22.50	1.069	0	0.050	0.053
	LTE Band 17	10M	25	24	QPSK	Bottom Side	1	23780	709	21.32	21.50	1.042	0.17	0.049	0.051
	LTE Band 4	20M	1	0	QPSK	Front	1	20300	1745	22.38	23.00	1.153	0	0.445	0.513
	LTE Band 4	20M	50	49	QPSK	Front	1	20300	1745	21.25	22.00	1.189	-0.06	0.445	0.529
	LTE Band 4	20M	1	0	QPSK	Back	1	20300	1745	22.38	23.00	1.153	-0.01	0.727	0.839
	LTE Band 4	20M	1	0	QPSK	Back	1	20050	1720	22.10	23.00	1.230	0.05	0.734	0.903
	LTE Band 4	20M	1	0	QPSK	Back	1	20175	1732.5	22.29	23.00	1.178	-0.03	0.721	0.849
	LTE Band 4	20M	50	49	QPSK	Back	1	20300	1745	21.25	22.00	1.189	0.03	0.746	0.887
	LTE Band 4	20M	50	49	QPSK	Back	1	20050	1720	21.08	22.00	1.236	-0.12	0.680	0.840
	LTE Band 4	20M	50	49	QPSK	Back	1	20175	1732.5	21.15	22.00	1.216	-0.02	0.683	0.831
	LTE Band 4	20M	100	0	QPSK	Back	1	20300	1745	21.21	22.00	1.199	-0.04	0.704	0.844
	LTE Band 4	20M	1	0	QPSK	Left Side	1	20300	1745	22.38	23.00	1.153	0.03	0.089	0.103
	LTE Band 4	20M	50	49	QPSK	Left Side	1	20300	1745	21.25	22.00	1.189	0.09	0.072	0.086
	LTE Band 4	20M	1	0	QPSK	Bottom Side	1	20300	1745	22.38	23.00	1.153	0.01	0.888	1.024
#17	**LTE Band 4**	**20M**	**1**	**0**	**QPSK**	**Bottom Side**	**1**	**20050**	**1720**	**22.10**	**23.00**	**1.230**	**0.09**	**0.856**	**1.053**
	LTE Band 4	20M	1	0	QPSK	Bottom Side	1	20175	1732.5	22.29	23.00	1.178	0.05	0.847	0.997
	LTE Band 4	20M	50	49	QPSK	Bottom Side	1	20300	1745	21.25	22.00	1.189	0.09	0.730	0.868
	LTE Band 4	20M	50	49	QPSK	Bottom Side	1	20050	1720	21.08	22.00	1.236	0.03	0.664	0.821
	LTE Band 4	20M	50	49	QPSK	Bottom Side	1	20175	1732.5	21.15	22.00	1.216	0.02	0.662	0.805
	LTE Band 4	20M	100	0	QPSK	Bottom Side	1	20300	1745	21.21	22.00	1.199	-0.01	0.724	0.868

Plot No.	Band	BW (MHz)	RB Size	RB offest	Modulation	Test Position	Gap (cm)	Ch.	Freq. (MHz)	Average Power (dBm)	Tune-Up Limit (dBm)	Tune-up Scaling Factor	Power Drift (dB)	Measured 1g SAR (W/kg)	Reported 1g SAR (W/kg)
	LTE Band 7	20M	1	99	QPSK	Front	1	21100	2535	21.15	22.00	1.216	0.07	0.371	0.451
	LTE Band 7	20M	50	49	QPSK	Front	1	21100	2535	20.12	21.00	1.225	0.06	0.291	0.356
	LTE Band 7	20M	1	99	QPSK	Back	1	21100	2535	21.15	22.00	1.216	0.03	1.030	1.253
	LTE Band 7	20M	1	99	QPSK	Back	1	20850	2510	20.67	22.00	1.358	-0.08	0.920	1.250
#18	**LTE Band 7**	**20M**	**1**	**99**	**QPSK**	**Back**	**1**	**21350**	**2560**	**20.75**	**22.00**	**1.334**	**-0.02**	**0.982**	**1.310**
	LTE Band 7	20M	50	49	QPSK	Back	1	21100	2535	20.12	21.00	1.225	-0.04	0.797	0.976
	LTE Band 7	20M	50	49	QPSK	Back	1	20850	2510	19.69	21.00	1.352	0.08	0.730	0.987
	LTE Band 7	20M	50	49	QPSK	Back	1	21350	2560	20.07	21.00	1.239	0.01	0.777	0.963
	LTE Band 7	20M	100	0	QPSK	Back	1	21100	2535	20.07	21.00	1.239	-0.14	0.740	0.917
	LTE Band 7	20M	1	99	QPSK	Left Side	1	21100	2535	21.15	22.00	1.216	0.07	0.100	0.122
	LTE Band 7	20M	50	49	QPSK	Left Side	1	21100	2535	20.12	21.00	1.225	0.09	0.079	0.097
	LTE Band 7	20M	1	99	QPSK	Bottom Side	1	21100	2535	21.15	22.00	1.216	-0.03	0.648	0.788
	LTE Band 7	20M	50	49	QPSK	Bottom Side	1	21100	2535	20.12	21.00	1.225	-0.11	0.513	0.628

<DTS WLAN SAR>

Plot No.	Band	Mode	Test Position	Gap (cm)	Ch.	Freq. (MHz)	Average Power (dBm)	Tune-Up Limit (dBm)	Scaling Factor	Duty Cycle %	Duty Cycle Scaling Factor	Power Drift (dB)	Measured 1g SAR (W/kg)	Reported 1g SAR (W/kg)
	WLAN 2.4GHz	802.11b 1Mbps	Front	1	6	2437	12.15	13.00	1.216	97.64	1.024	0.1	0.020	0.025
#19	**WLAN 2.4GHz**	**802.11b 1Mbps**	**Back**	**1**	**6**	**2437**	**12.15**	**13.00**	**1.216**	**97.64**	**1.024**	**0.04**	**0.052**	**0.065**
	WLAN 2.4GHz	802.11b 1Mbps	Back	1	1	2412	8.18	10.00	1.521	97.64	1.024	0.02	0.007	0.011
	WLAN 2.4GHz	802.11b 1Mbps	Back	1	11	2462	9.51	10.00	1.119	97.64	1.024	0.03	0.032	0.037
	WLAN 2.4GHz	802.11b 1Mbps	Left Side	1	6	2437	12.15	13.00	1.216	97.64	1.024	-0.05	0.009	0.012
	WLAN 2.4GHz	802.11b 1Mbps	Top Side	1	6	2437	12.15	13.00	1.216	97.64	1.024	-0.05	0.032	0.040

<DSS Bluetooth SAR>

Plot No.	Band	Mode	Test Position	Gap (cm)	Ch.	Freq. (MHz)	Average Power (dBm)	Tune-Up Limit (dBm)	Tune-up Scaling Factor	Power Drift (dB)	Measured 1g SAR (W/kg)	Reported 1g SAR (W/kg)
	Bluetooth	DH5	Front	1	39	2441	9.76	10.00	1.057	0.18	0.018	0.019
#20	**Bluetooth**	**DH5**	**Back**	**1**	**39**	**2441**	**9.76**	**10.00**	**1.057**	**0.18**	**0.036**	**0.038**
	Bluetooth	DH5	Back	1	0	2402	9.16	10.00	1.213	0.17	0.019	0.023
	Bluetooth	DH5	Back	1	78	2480	7.80	9.50	1.479	0.15	0.025	0.037
	Bluetooth	DH5	Left Side	1	39	2441	9.76	10.00	1.057	0.17	0.006	0.007
	Bluetooth	DH5	Top Side	1	39	2441	9.76	10.00	1.057	0.08	0.026	0.027

14.3 Body Worn Accessory SAR

<GSM SAR>

Plot No.	Band	Mode	Test Position	Gap (cm)	Ch.	Freq. (MHz)	Average Power (dBm)	Tune-Up Limit (dBm)	Tune-up Scaling Factor	Power Drift (dB)	Measured 1g SAR (W/kg)	Reported 1g SAR (W/kg)
	GSM850	GPRS (4 Tx slots)	Front	1	251	848.8	27.91	28.00	1.021	-0.04	0.767	0.783
	GSM850	GPRS (4 Tx slots)	Back	1	251	848.8	27.91	28.00	1.021	-0.02	0.979	0.999
#11	**GSM850**	**GPRS (4 Tx slots)**	**Back**	**1**	**128**	**824.2**	**27.48**	**28.00**	**1.127**	**-0.04**	**0.988**	**1.114**
	GSM850	GPRS (4 Tx slots)	Back	1	189	836.4	27.71	28.00	1.069	0.02	0.995	1.064
	GSM1900	GPRS (2 Tx slots)	Front	1	810	1909.8	27.61	29.00	1.377	-0.02	0.288	0.397
	GSM1900	GPRS (2 Tx slots)	Back	1	810	1909.8	27.61	29.00	1.377	-0.03	0.619	0.852
	GSM1900	GPRS (2 Tx slots)	Back	1	512	1850.2	27.48	29.00	1.419	0	0.631	0.895
#12	**GSM1900**	**GPRS (2 Tx slots)**	**Back**	**1**	**661**	**1880**	**27.19**	**29.00**	**1.517**	**0.03**	**0.594**	**0.901**

<WCDMA SAR>

Plot No.	Band	Mode	Test Position	Gap (cm)	Ch.	Freq. (MHz)	Average Power (dBm)	Tune-Up Limit (dBm)	Tune-up Scaling Factor	Power Drift (dB)	Measured 1g SAR (W/kg)	Reported 1g SAR (W/kg)
	WCDMA Band V	RMC 12.2Kbps	Front	1	4132	826.4	23.06	23.50	1.107	0.06	0.365	0.404
#13	**WCDMA Band V**	**RMC 12.2Kbps**	**Back**	**1**	**4132**	**826.4**	**23.06**	**23.50**	**1.107**	**-0.02**	**0.481**	**0.532**
	WCDMA Band V	RMC 12.2Kbps	Back	1	4182	836.4	22.99	23.50	1.125	-0.07	0.442	0.497
	WCDMA Band V	RMC 12.2Kbps	Back	1	4233	846.6	22.90	23.50	1.148	-0.06	0.439	0.504
	WCDMA Band IV	RMC 12.2Kbps	Front	1	1513	1752.6	22.28	23.50	1.324	0.03	0.562	0.744
	WCDMA Band IV	RMC 12.2Kbps	Back	1	1513	1752.6	22.28	23.50	1.324	0.09	0.906	1.200
	WCDMA Band IV	RMC 12.2Kbps	Back	1	1312	1712.4	21.86	23.50	1.459	-0.11	0.848	1.237
	WCDMA Band IV	RMC 12.2Kbps	Back	1	1413	1732.6	21.82	23.50	1.472	0.04	0.822	1.210
#21	**WCDMA Band IV**	**RMC 12.2Kbps**	**Back with headset**	**1**	**1312**	**1712.4**	**21.86**	**23.50**	**1.459**	**0**	**0.860**	**1.255**
	WCDMA Band IV	RMC 12.2Kbps	Back with headset	1	1413	1732.6	21.82	23.50	1.472	0.01	0.817	1.203
	WCDMA Band IV	RMC 12.2Kbps	Back with headset	1	1513	1752.6	22.28	23.50	1.324	-0.03	0.882	1.168
	WCDMA Band II	RMC 12.2Kbps	Front	1	9538	1907.6	22.39	23.50	1.291	0.02	0.481	0.621
	WCDMA Band II	RMC 12.2Kbps	Back	1	9538	1907.6	22.39	23.50	1.291	-0.01	0.806	1.041
	WCDMA Band II	RMC 12.2Kbps	Back	1	9262	1852.4	22.09	23.50	1.384	0.03	0.724	1.002
#15	**WCDMA Band II**	**RMC 12.2Kbps**	**Back**	**1**	**9400**	**1880**	**21.89**	**23.50**	**1.449**	**-0.05**	**0.872**	**1.263**
	WCDMA Band II	RMC 12.2Kbps	Back with headset	1	9538	1907.6	22.39	23.50	1.291	-0.1	0.918	1.185
	WCDMA Band II	RMC 12.2Kbps	Back with headset	1	9262	1852.4	22.09	23.50	1.384	-0.02	0.840	1.162
	WCDMA Band II	RMC 12.2Kbps	Back with headset	1	9400	1880	21.89	23.50	1.449	0	0.806	1.168

<LTE SAR>

Plot No.	Band	BW (MHz)	RB Size	RB offest	Modulation	Test Position	Gap (cm)	Ch.	Freq. (MHz)	Average Power (dBm)	Tune-Up Limit (dBm)	Tune-up Scaling Factor	Power Drift (dB)	Measured 1g SAR (W/kg)	Reported 1g SAR (W/kg)
	LTE Band 17	10M	1	24	QPSK	Front	1	23780	709	22.21	22.50	1.069	-0.09	0.174	0.186
	LTE Band 17	10M	25	24	QPSK	Front	1	23780	709	21.32	21.50	1.042	0.06	0.166	0.173
#16	**LTE Band 17**	**10M**	**1**	**24**	**QPSK**	**Back**	**1**	**23780**	**709**	**22.21**	**22.50**	**1.069**	**-0.01**	**0.206**	**0.220**
	LTE Band 17	10M	25	24	QPSK	Back	1	23780	709	21.32	21.50	1.042	-0.02	0.203	0.212
	LTE Band 4	20M	1	0	QPSK	Front	1	20300	1745	22.38	23.00	1.153	0	0.445	0.513
	LTE Band 4	20M	50	49	QPSK	Front	1	20300	1745	21.25	22.00	1.189	-0.06	0.445	0.529
	LTE Band 4	20M	1	0	QPSK	Back	1	20300	1745	22.38	23.00	1.153	-0.01	0.727	0.839
#22	**LTE Band 4**	**20M**	**1**	**0**	**QPSK**	**Back**	**1**	**20050**	**1720**	**22.10**	**23.00**	**1.230**	**0.05**	**0.734**	**0.903**
	LTE Band 4	20M	1	0	QPSK	Back	1	20175	1732.5	22.29	23.00	1.178	-0.03	0.721	0.849
	LTE Band 4	20M	50	49	QPSK	Back	1	20300	1745	21.25	22.00	1.189	0.03	0.746	0.887
	LTE Band 4	20M	50	49	QPSK	Back	1	20050	1720	21.08	22.00	1.236	-0.12	0.680	0.840
	LTE Band 4	20M	50	49	QPSK	Back	1	20175	1732.5	21.15	22.00	1.216	-0.02	0.683	0.831
	LTE Band 4	20M	100	0	QPSK	Back	1	20300	1745	21.21	22.00	1.199	-0.04	0.704	0.844
	LTE Band 7	20M	1	99	QPSK	Front	1	21100	2535	21.15	22.00	1.216	0.07	0.371	0.451
	LTE Band 7	20M	50	49	QPSK	Front	1	21100	2535	20.12	21.00	1.225	0.06	0.291	0.356
	LTE Band 7	20M	1	99	QPSK	Back	1	21100	2535	21.15	22.00	1.216	0.03	1.030	1.253
	LTE Band 7	20M	1	99	QPSK	Back	1	20850	2510	20.67	22.00	1.358	-0.08	0.920	1.250
#18	**LTE Band 7**	**20M**	**1**	**99**	**QPSK**	**Back**	**1**	**21350**	**2560**	**20.75**	**22.00**	**1.334**	**-0.02**	**0.982**	**1.310**
	LTE Band 7	20M	50	49	QPSK	Back	1	21100	2535	20.12	21.00	1.225	-0.04	0.797	0.976
	LTE Band 7	20M	50	49	QPSK	Back	1	20850	2510	19.69	21.00	1.352	0.08	0.730	0.987
	LTE Band 7	20M	50	49	QPSK	Back	1	21350	2560	20.07	21.00	1.239	0.01	0.777	0.963
	LTE Band 7	20M	100	0	QPSK	Back	1	21100	2535	20.07	21.00	1.239	-0.14	0.740	0.917
	LTE Band 7	20M	1	99	QPSK	Back with headset	1	21350	2560	20.75	22.00	1.334	-0.05	0.971	1.295
	LTE Band 7	20M	1	99	QPSK	Back with headset	1	20850	2510	20.67	22.00	1.358	-0.15	0.935	1.270
	LTE Band 7	20M	1	99	QPSK	Back with headset	1	21100	2535	21.15	22.00	1.216	-0.08	0.942	1.146

<DTS WLAN SAR>

Plot No.	Band	Mode	Test Position	Gap (cm)	Ch.	Freq. (MHz)	Average Power (dBm)	Tune-Up Limit (dBm)	Scaling Factor	Duty Cycle %	Duty Cycle Scaling Factor	Power Drift (dB)	Measured 1g SAR (W/kg)	Reported 1g SAR (W/kg)
	WLAN 2.4GHz	802.11b 1Mbps	Front	1	6	2437	12.15	13.00	1.216	97.64	1.024	0.1	0.020	0.025
#19	**WLAN 2.4GHz**	**802.11b 1Mbps**	**Back**	**1**	**6**	**2437**	**12.15**	**13.00**	**1.216**	**97.64**	**1.024**	**0.04**	**0.052**	**0.065**
	WLAN 2.4GHz	802.11b 1Mbps	Back	1	1	2412	8.18	10.00	1.521	97.64	1.024	0.02	0.007	0.011
	WLAN 2.4GHz	802.11b 1Mbps	Back	1	11	2462	9.51	10.00	1.119	97.64	1.024	0.03	0.032	0.037

<DSS Bluetooth SAR>

Plot No.	Band	Mode	Test Position	Gap (cm)	Ch.	Freq. (MHz)	Average Power (dBm)	Tune-Up Limit (dBm)	Tune-up Scaling Factor	Power Drift (dB)	Measured 1g SAR (W/kg)	Reported 1g SAR (W/kg)
	Bluetooth	DH5	Front	1	39	2441	9.76	10.00	1.057	0.18	0.018	0.019
#20	**Bluetooth**	**DH5**	**Back**	**1**	**39**	**2441**	**9.76**	**10.00**	**1.057**	**0.18**	**0.036**	**0.038**
	Bluetooth	DH5	Back	1	0	2402	9.16	10.00	1.213	0.17	0.019	0.023
	Bluetooth	DH5	Back	1	78	2480	7.80	9.50	1.479	0.15	0.025	0.037

14.4 Repeated SAR Measurement

No.	Band	Mode	Test Position	BW (MHz)	RB Size	RB offest	Gap (cm)	Ch.	Freq. (MHz)	Average Power (dBm)	Tune-Up Limit (dBm)	Tune-up Scaling Factor	Duty Cycle %	Duty Cycle Scaling Factor	Power Drift (dB)	Measured 1g SAR (W/kg)	Ratio	Reported 1g SAR (W/kg)
1st	GSM850	GPRS (4 Tx slots)	Back	-	-	-	1	189	836.4	27.71	28.00	1.069	100	1.000	0.02	0.995	1	1.064
2nd	GSM850	GPRS (4 Tx slots)	Back	-	-	-	1	189	836.4	27.71	28.00	1.069	100	1.000	-0.01	0.971	1.025	1.038
1st	WCDMA Band IV	RMC 12.2Kbps	Back	-	-	-	1	1513	1752.6	22.28	23.50	1.324	100	1.000	0.09	0.906	1	1.200
2nd	WCDMA Band IV	RMC 12.2Kbps	Back	-	-	-	1	1513	1752.6	22.28	23.50	1.324	100	1.000	-0.03	0.872	1.039	1.155
1st	WCDMA Band II	RMC 12.2Kbps	Back with headset	-	-	-	1	9538	1907.6	22.39	23.50	1.291	100	1.000	-0.1	0.918	1	1.185
2nd	WCDMA Band II	RMC 12.2Kbps	Back with headset	-	-	-	1	9538	1907.6	22.39	23.50	1.291	100	1.000	-0.06	0.870	1.055	1.123
1st	LTE Band 7	QPSK	Back	20M	1	99	1	21100	2535	21.15	22.00	1.216	100	1.000	0.03	1.030	1	1.253
2nd	LTE Band 7	QPSK	Back	20M	1	99	1	21100	2535	21.15	22.00	1.216	100	1.000	-0.05	0.947	1.088	1.152

General Note:

1. Per KDB 865664 D01v01r04, for each frequency band, repeated SAR measurement is required only when the measured SAR is ≥0.8W/kg
2. Per KDB 865664 D01v01r04, if the ratio among the repeated measurement is ≤ 1.2 and the measured SAR <1.45W/kg, only one repeated measurement is required.
3. The ratio is the difference in percentage between original and repeated *measured SAR*.
4. All measurement SAR result is scaled-up to account for tune-up tolerance and is compliant.

15. Simultaneous Transmission Analysis

NO.	Simultaneous Transmission Configurations	Portable Handset			Note
		Head	Body-worn	Hotspot	
1.	GSM(Voice) + WLAN2.4GHz(data)	Yes	Yes		
2.	WCDMA(Voice) + WLAN2.4GHz(data)	Yes	Yes		
3.	GSM(Voice) + Bluetooth(data)	Yes	Yes		
4.	WCDMA((Voice) + Bluetooth(data)	Yes	Yes		
5.	GPRS/EDGE(Data) + WLAN2.4GHz(data)	Yes	Yes	Yes	2.4GHz Hotspot
6.	WCDMA(Data) + WLAN2.4GHz(data)	Yes	Yes	Yes	2.4GHz Hotspot
7.	LTE(Data) + WLAN2.4GHz(data)	Yes	Yes	Yes	2.4GHz Hotspot
8.	GPRS/EDGE(Data) + Bluetooth(data)	Yes	Yes	Yes	Bluetooth Tethering
9.	WCDMA(Data) + Bluetooth(data)	Yes	Yes	Yes	Bluetooth Tethering
10.	LTE(Data) + Bluetooth(data)	Yes	Yes	Yes	Bluetooth Tethering

General Note:

1. This device supported VoIP in GPRS, EGPRS, WCDMA and LTE (e.g. 3rd party VoIP).
2. This device 2.4GHz WLAN supports hotspot operation.
3. WLAN and Bluetooth share the same antenna, and cannot transmit simultaneously.
4. EUT will choose each GSM, WCDMA and LTE according to the network signal condition; therefore, they will not operate simultaneously at any moment.
5. The reported SAR summation is calculated based on the same configuration and test position.
6. The Scaled SAR summation is calculated based on the same configuration and test position.
7. Per KDB 447498 D01v06, simultaneous transmission SAR is compliant if,
   i) Scalar SAR summation < 1.6W/kg.
   ii) SPLSR = $(SAR_1 + SAR_2)^{1.5}$ / (*min. separation distance, mm*), and the peak separation distance is determined from the square root of $[(x_1-x_2)^2 + (y_1-y_2)^2 + (z_1-z_2)^2]$, where (x_1, y_1, z_1) and (x_2, y_2, z_2) are the coordinates of the extrapolated peak SAR locations in the zoom scan.
   iii) If SPLSR ≤ 0.04, simultaneously transmission SAR measurement is not necessary.
   iv) Simultaneously transmission SAR measurement, and the reported multi-band SAR < 1.6W/kg.

15.1 Head Exposure Conditions

<WWAN + WLAN>

WWAN Band		Exposure Position	WWAN PCE Max. WWAN SAR (W/kg)	WLAN DTS Max. WLAN SAR (W/kg)	Summed SAR (W/kg)	SPLSR	Case No
GSM	GSM850	Right Cheek	0.484	0.095	0.58		
		Right Tilted	0.363	0.111	0.47		
		Left Cheek	0.607	0.095	0.70		
		Left Tilted	0.491	0.112	0.60		
	GSM1900	Right Cheek	0.161	0.095	0.26		
		Right Tilted	0.052	0.111	0.16		
		Left Cheek	0.200	0.095	0.30		
		Left Tilted	0.088	0.112	0.20		
WCDMA	Band V	Right Cheek	0.249	0.095	0.34		
		Right Tilted	0.187	0.111	0.30		
		Left Cheek	0.302	0.095	0.40		
		Left Tilted	0.243	0.112	0.36		
	Band IV	Right Cheek	0.327	0.095	0.42		
		Right Tilted	0.109	0.111	0.22		
		Left Cheek	0.347	0.095	0.44		
		Left Tilted	0.164	0.112	0.28		
	Band II	Right Cheek	0.243	0.095	0.34		
		Right Tilted	0.085	0.111	0.20		
		Left Cheek	0.329	0.095	0.42		
		Left Tilted	0.116	0.112	0.23		
LTE	Band 17	Right Cheek	0.210	0.095	0.31		
		Right Tilted	0.128	0.111	0.24		
		Left Cheek	0.250	0.095	0.35		
		Left Tilted	0.138	0.112	0.25		
	Band 4	Right Cheek	0.330	0.095	0.43		
		Right Tilted	0.130	0.111	0.24		
		Left Cheek	0.298	0.095	0.39		
		Left Tilted	0.173	0.112	0.29		
	Band 7	Right Cheek	0.150	0.095	0.25		
		Right Tilted	0.058	0.111	0.17		
		Left Cheek	0.251	0.095	0.35		
		Left Tilted	0.044	0.112	0.16		

<WWAN + Bluetooth>

WWAN Band		Exposure Position	WWAN PCE Max. WWAN SAR (W/kg)	Bluetooth DSS Max. Bluetooth SAR (W/kg)	Summed SAR (W/kg)	SPLSR	Case No
GSM	GSM850	Right Cheek	0.484	0.017	0.50		
		Right Tilted	0.363	0.063	0.43		
		Left Cheek	0.607	0.045	0.65		
		Left Tilted	0.491	0.060	0.55		
	GSM1900	Right Cheek	0.161	0.017	0.18		
		Right Tilted	0.052	0.063	0.12		
		Left Cheek	0.200	0.045	0.25		
		Left Tilted	0.088	0.060	0.15		
WCDMA	Band V	Right Cheek	0.249	0.017	0.27		
		Right Tilted	0.187	0.063	0.25		
		Left Cheek	0.302	0.045	0.35		
		Left Tilted	0.243	0.060	0.30		
	Band IV	Right Cheek	0.327	0.017	0.34		
		Right Tilted	0.109	0.063	0.17		
		Left Cheek	0.347	0.045	0.39		
		Left Tilted	0.164	0.060	0.22		
	Band II	Right Cheek	0.243	0.017	0.26		
		Right Tilted	0.085	0.063	0.15		
		Left Cheek	0.329	0.045	0.37		
		Left Tilted	0.116	0.060	0.18		
LTE	Band 17	Right Cheek	0.210	0.017	0.23		
		Right Tilted	0.128	0.063	0.19		
		Left Cheek	0.250	0.045	0.30		
		Left Tilted	0.138	0.060	0.20		
	Band 4	Right Cheek	0.330	0.017	0.35		
		Right Tilted	0.130	0.063	0.19		
		Left Cheek	0.298	0.045	0.34		
		Left Tilted	0.173	0.060	0.23		
	Band 7	Right Cheek	0.150	0.017	0.17		
		Right Tilted	0.058	0.063	0.12		
		Left Cheek	0.251	0.045	0.30		
		Left Tilted	0.044	0.060	0.10		

15.2 Hotspot Exposure Conditions

<WWAN + WLAN>

WWAN Band		Exposure Position	WWAN PCE Max. WWAN SAR (W/kg)	WLAN DTS Max. WLAN SAR (W/kg)	Summed SAR (W/kg)	SPLSR	Case No
GSM	GSM850	Front	0.783	0.025	0.81		
		Back	1.114	0.065	1.18		
		Left side	0.942	0.012	0.95		
		Top side		0.040	0.04		
		Bottom side	0.237		0.24		
	GSM1900	Front	0.397	0.025	0.42		
		Back	0.901	0.065	0.97		
		Left side	0.096	0.012	0.11		
		Top side		0.040	0.04		
		Bottom side	0.636		0.64		
WCDMA	Band V	Front	0.404	0.025	0.43		
		Back	0.532	0.065	0.60		
		Left side	0.504	0.012	0.52		
		Top side		0.040	0.04		
		Bottom side	0.116		0.12		
	Band IV	Front	0.744	0.025	0.77		
		Back	1.237	0.065	1.30		
		Left side	0.124	0.012	0.14		
		Top side		0.040	0.04		
		Bottom side	1.171		1.17		
	Band II	Front	0.621	0.025	0.65		
		Back	1.263	0.065	1.33		
		Left side	0.152	0.012	0.16		
		Top side		0.040	0.04		
		Bottom side	0.956		0.96		

WWAN Band		Exposure Position	WWAN PCE Max. WWAN SAR (W/kg)	WLAN DTS Max. WLAN SAR (W/kg)	Summed SAR (W/kg)	SPLSR	Case No
LTE	Band 17	Front	0.186	0.025	0.21		
		Back	0.220	0.065	0.29		
		Left side	0.184	0.012	0.20		
		Top side		0.040	0.04		
		Bottom side	0.053		0.05		
	Band 4	Front	0.529	0.025	0.55		
		Back	0.903	0.065	0.97		
		Left side	0.103	0.012	0.12		
		Top side		0.040	0.04		
		Bottom side	1.053		1.05		
	Band 7	Front	0.451	0.025	0.48		
		Back	1.310	0.065	**1.38**		
		Left side	0.122	0.012	0.13		
		Top side		0.040	0.04		
		Bottom side	0.788		0.79		

<WWAN + Bluetooth>

WWAN Band		Exposure Position	WWAN PCE Max. WWAN SAR (W/kg)	Bluetooth DSS Max. Bluetooth SAR (W/kg)	Summed SAR (W/kg)	SPLSR	Case No
GSM	GSM850	Front	0.783	0.019	0.80		
		Back	1.114	0.038	1.15		
		Left side	0.942	0.007	0.95		
		Top side		0.027	0.03		
		Bottom side	0.237		0.24		
	GSM1900	Front	0.397	0.019	0.42		
		Back	0.901	0.038	0.94		
		Left side	0.096	0.007	0.10		
		Top side		0.027	0.03		
		Bottom side	0.636		0.64		
WCDMA	Band V	Front	0.404	0.019	0.42		
		Back	0.532	0.038	0.57		
		Left side	0.504	0.007	0.51		
		Top side		0.027	0.03		
		Bottom side	0.116		0.12		
	Band IV	Front	0.744	0.019	0.76		
		Back	1.237	0.038	1.28		
		Left side	0.124	0.007	0.13		
		Top side		0.027	0.03		
		Bottom side	1.171		1.17		
	Band II	Front	0.621	0.019	0.64		
		Back	1.263	0.038	1.30		
		Left side	0.152	0.007	0.16		
		Top side		0.027	0.03		
		Bottom side	0.956		0.96		

WWAN Band		Exposure Position	WWAN PCE Max. WWAN SAR (W/kg)	Bluetooth DSS Max. Bluetooth SAR (W/kg)	Summed SAR (W/kg)	SPLSR	Case No
LTE	Band 17	Front	0.186	0.019	0.21		
		Back	0.220	0.038	0.26		
		Left side	0.184	0.007	0.19		
		Top side		0.027	0.03		
		Bottom side	0.053		0.05		
	Band 4	Front	0.529	0.019	0.55		
		Back	0.903	0.038	0.94		
		Left side	0.103	0.007	0.11		
		Top side		0.027	0.03		
		Bottom side	1.053		1.05		
	Band 7	Front	0.451	0.019	0.47		
		Back	1.310	0.038	**1.35**		
		Left side	0.122	0.007	0.13		
		Top side		0.027	0.03		
		Bottom side	0.788		0.79		

15.3 Body-Worn Accessory Exposure Conditions

<WWAN + WLAN>

WWAN Band		Exposure Position	WWAN PCE Max. WWAN SAR (W/kg)	WLAN DTS Max. WLAN SAR (W/kg)	Summed SAR (W/kg)	SPLSR	Case No
GSM	GSM850	Front	0.783	0.025	0.81		
		Back	1.114	0.065	1.18		
	GSM1900	Front	0.397	0.025	0.42		
		Back	0.901	0.065	0.97		
WCDMA	Band V	Front	0.404	0.025	0.43		
		Back	0.532	0.065	0.60		
	Band IV	Front	0.744	0.025	0.77		
		Back	1.237	0.065	1.30		
		Back with headset	1.255		1.26		
	Band II	Front	0.621	0.025	0.65		
		Back	1.263	0.065	1.33		
		Back with headset	1.185		1.19		
LTE	Band 17	Front	0.186	0.025	0.21		
		Back	0.220	0.065	0.29		
	Band 4	Front	0.529	0.025	0.55		
		Back	0.903	0.065	0.97		
	Band 7	Front	0.451	0.025	0.48		
		Back	1.310	0.065	**1.38**		
		Back with headset	1.295		1.30		

<WWAN + Bluetooth>

WWAN Band		Exposure Position	WWAN PCE Max. WWAN SAR (W/kg)	Bluetooth DSS Max. Bluetooth SAR (W/kg)	Summed SAR (W/kg)	SPLSR	Case No
GSM	GSM850	Front	0.783	0.019	0.80		
		Back	1.114	0.038	1.15		
	GSM1900	Front	0.397	0.019	0.42		
		Back	0.901	0.038	0.94		
WCDMA	Band V	Front	0.404	0.019	0.42		
		Back	0.532	0.038	0.57		
	Band IV	Front	0.744	0.019	0.76		
		Back	1.237	0.038	1.28		
		Back with headset	1.255		1.26		
	Band II	Front	0.621	0.019	0.64		
		Back	1.263	0.038	1.30		
		Back with headset	1.185		1.19		
LTE	Band 17	Front	0.186	0.019	0.21		
		Back	0.220	0.038	0.26		
	Band 4	Front	0.529	0.019	0.55		
		Back	0.903	0.038	0.94		
	Band 7	Front	0.451	0.019	0.47		
		Back	1.310	0.038	1.35		
		Back with headset	1.295		1.30		

Test Engineer： Luke Lu

16. Uncertainty Assessment

The component of uncertainly may generally be categorized according to the methods used to evaluate them. The evaluation of uncertainly by the statistical analysis of a series of observations is termed a Type An evaluation of uncertainty. The evaluation of uncertainty by means other than the statistical analysis of a series of observation is termed a Type B evaluation of uncertainty. Each component of uncertainty, however evaluated, is represented by an estimated standard deviation, termed standard uncertainty, which is determined by the positive square root of the estimated variance.

A Type A evaluation of standard uncertainty may be based on any valid statistical method for treating data. This includes calculating the standard deviation of the mean of a series of independent observations; using the method of least squares to fit a curve to the data in order to estimate the parameter of the curve and their standard deviations; or carrying out an analysis of variance in order to identify and quantify random effects in certain kinds of measurement.

A type B evaluation of standard uncertainty is typically based on scientific judgment using all of the relevant information available. These may include previous measurement data, experience, and knowledge of the behavior and properties of relevant materials and instruments, manufacture's specification, data provided in calibration reports and uncertainties assigned to reference data taken from handbooks. Broadly speaking, the uncertainty is either obtained from an outdoor source or obtained from an assumed distribution, such as the normal distribution, rectangular or triangular distributions indicated in table below.

Uncertainty Distributions	Normal	Rectangular	Triangular	U-Shape
Multi-plying Factor[a]	1/k[b]	1/√3	1/√6	1/√2

(a) standard uncertainty is determined as the product of the multiplying factor and the estimated range of variations in the measured quantity

(b) κ is the coverage factor

Table 16.1. Standard Uncertainty for Assumed Distribution

The combined standard uncertainty of the measurement result represents the estimated standard deviation of the result. It is obtained by combining the individual standard uncertainties of both Type A and Type B evaluation using the usual "root-sum-squares" (RSS) methods of combining standard deviations by taking the positive square root of the estimated variances.

Expanded uncertainty is a measure of uncertainty that defines an interval about the measurement result within which the measured value is confidently believed to lie. It is obtained by multiplying the combined standard uncertainty by a coverage factor. Typically, the coverage factor ranges from 2 to 3. Using a coverage factor allows the true value of a measured quantity to be specified with a defined probability within the specified uncertainty range. For purpose of this document, a coverage factor two is used, which corresponds to confidence interval of about 95 %. The DASY uncertainty Budget is shown in the following tables.

Error Description	Uncertainty Value (±%)	Probability	Divisor	(Ci) 1g	(Ci) 10g	Standard Uncertainty (1g) (±%)	Standard Uncertainty (10g) (±%)
Measurement System							
Probe Calibration	6.0	N	1	1	1	6.0	6.0
Axial Isotropy	4.7	R	1.732	0.7	0.7	1.9	1.9
Hemispherical Isotropy	9.6	R	1.732	0.7	0.7	3.9	3.9
Boundary Effects	1.0	R	1.732	1	1	0.6	0.6
Linearity	4.7	R	1.732	1	1	2.7	2.7
System Detection Limits	1.0	R	1.732	1	1	0.6	0.6
Modulation Response	3.2	R	1.732	1	1	1.8	1.8
Readout Electronics	0.3	N	1	1	1	0.3	0.3
Response Time	0.0	R	1.732	1	1	0.0	0.0
Integration Time	2.6	R	1.732	1	1	1.5	1.5
RF Ambient Noise	3.0	R	1.732	1	1	1.7	1.7
RF Ambient Reflections	3.0	R	1.732	1	1	1.7	1.7
Probe Positioner	0.4	R	1.732	1	1	0.2	0.2
Probe Positioning	2.9	R	1.732	1	1	1.7	1.7
Max. SAR Eval.	2.0	R	1.732	1	1	1.2	1.2
Test Sample Related							
Device Positioning	3.0	N	1	1	1	3.0	3.0
Device Holder	3.6	N	1	1	1	3.6	3.6
Power Drift	5.0	R	1.732	1	1	2.9	2.9
Power Scaling	0.0	R	1.732	1	1	0.0	0.0
Phantom and Setup							
Phantom Uncertainty	6.1	R	1.732	1	1	3.5	3.5
SAR correction	0.0	R	1.732	1	0.84	0.0	0.0
Liquid Conductivity Repeatability	0.2	N	1	0.78	0.71	0.1	0.1
Liquid Conductivity (target)	5.0	R	1.732	0.78	0.71	2.3	2.0
Liquid Conductivity (mea.)	2.5	R	1.732	0.78	0.71	1.1	1.0
Temp. unc. - Conductivity	3.4	R	1.732	0.78	0.71	1.5	1.4
Liquid Permittivity Repeatability	0.15	N	1	0.23	0.26	0.0	0.0
Liquid Permittivity (target)	5.0	R	1.732	0.23	0.26	0.7	0.8
Liquid Permittivity (mea.)	2.5	R	1.732	0.23	0.26	0.3	0.4
Temp. unc. - Permittivity	0.83	R	1.732	0.23	0.26	0.1	0.1
Combined Std. Uncertainty						11.4%	11.4%
Coverage Factor for 95 %						K=2	K=2
Expanded STD Uncertainty						22.9%	22.7%

Table 16.2. Uncertainty Budget for frequency range 300 MHz to 3 GHz

17. References

[1] FCC 47 CFR Part 2 “Frequency Allocations and Radio Treaty Matters; General Rules and Regulations”

[2] ANSI/IEEE Std. C95.1-1992, “IEEE Standard for Safety Levels with Respect to Human Exposure to Radio Frequency Electromagnetic Fields, 3 kHz to 300 GHz”, September 1992

[3] FCC KDB 248227 D01 v02r02, “SAR Guidance for IEEE 802.11 (WiFi) Transmitters”, Oct 2015.

[4] FCC KDB 447498 D01 v06, “Mobile and Portable Device RF Exposure Procedures and Equipment Authorization Policies”, Oct 2015

[5] FCC KDB 648474 D04 v01r03, “SAR Evaluation Considerations for Wireless Handsets”, Oct 2015.

[6] FCC KDB 941225 D01 v03r01, “3G SAR MEAUREMENT PROCEDURES”, Oct 2015

[7] FCC KDB 941225 D05 v02r04, “SAR Evaluation Considerations for LTE Devices”, Oct 2015

[8] FCC KDB 941225 D06 v02r01, "SAR Evaluation Procedures for Portable Devices with Wireless Router Capabilities", Oct 2015.

[9] FCC KDB 865664 D01 v01r04, "SAR Measurement Requirements for 100 MHz to 6 GHz", Aug 2015.

[10] FCC KDB 865664 D02 v01r02, “RF Exposure Compliance Reporting and Documentation Considerations” Oct 2015.

Appendix A. Plots of System Performance Check

The plots are shown as follows.

System Check_Head_750MHz_150518

DUT: D750V3-SN:1132

Communication System: CW; Frequency: 750 MHz;Duty Cycle: 1:1
Medium: HSL_750_150518 Medium parameters used: f = 750 MHz; σ = 0.898 S/m; ε_r = 43.176; ρ = 1000 kg/m^3
Ambient Temperature：23.3 ℃； Liquid Temperature：22.3 ℃

DASY5 Configuration
- Probe: EX3DV4 - SN3578; ConvF(9.59, 9.59, 9.59); Calibrated: 2015/3/31;
- Sensor-Surface: 1.4mm (Mechanical Surface Detection)
- Electronics: DAE4 Sn778; Calibrated: 2014/8/21
- Phantom: SAM_Left; Type: QD000P40CD; Serial: S/N:1796
- Measurement SW: DASY52, Version 52.8 (8); SEMCAD X Version 14.6.10 (7331)

Configuration/Pin=250mW/Area Scan (61x61x1): Interpolated grid: dx=1.500 mm, dy=1.500 mm
Maximum value of SAR (interpolated) = 3.09 W/kg

Configuration/Pin=250mW/Zoom Scan (5x5x7)/Cube 0: Measurement grid: dx=8mm, dy=8mm, dz=5mm
Reference Value = 61.19 V/m; Power Drift = -0.05 dB
Peak SAR (extrapolated) = 3.22 W/kg
SAR(1 g) = 2.15 W/kg; SAR(10 g) = 1.43 W/kg
Maximum value of SAR (measured) = 2.84 W/kg

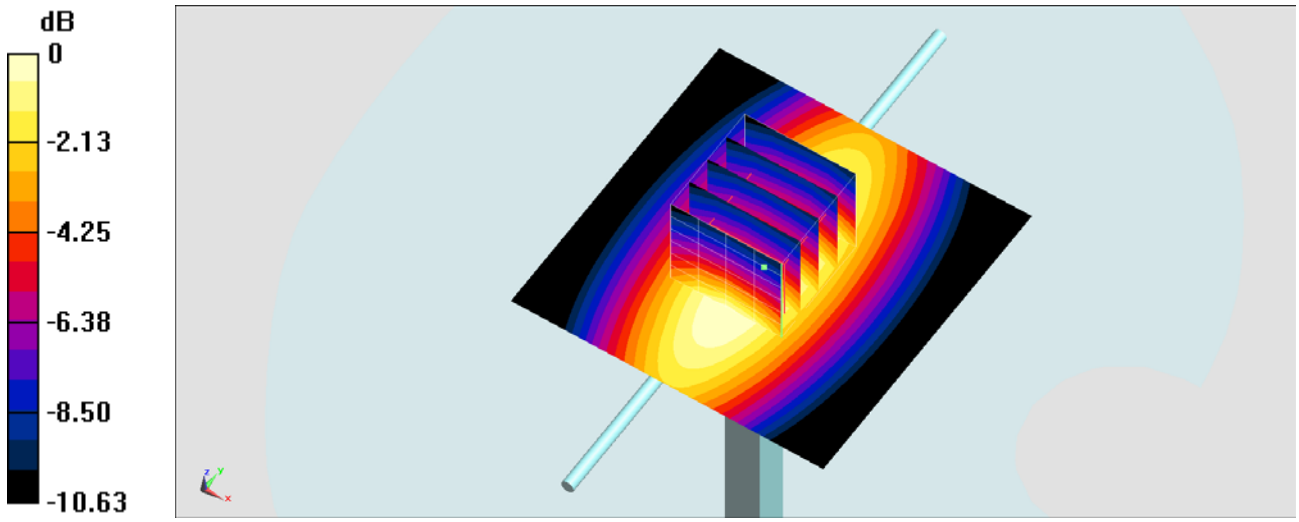

0 dB = 2.84 W/kg = 4.53 dBW/kg

Test Laboratory: Sporton International Inc. SAR/HAC Testing Lab Date: 2015/5/18

System Check_Body_750MHz_150518

DUT: D750V3-SN:1132

Communication System: CW; Frequency: 750 MHz;Duty Cycle: 1:1
Medium: MSL_750_150518 Medium parameters used: f = 750 MHz; σ = 0.967 S/m; ε_r = 57.868; ρ = 1000 kg/m^3
Ambient Temperature：23.3 ℃； Liquid Temperature：22.3 ℃

DASY5 Configuration
- Probe: EX3DV4 - SN3578; ConvF(9.29, 9.29, 9.29); Calibrated: 2015/3/31;
- Sensor-Surface: 1.4mm (Mechanical Surface Detection)
- Electronics: DAE4 Sn778; Calibrated: 2014/8/21
- Phantom: SAM_Left; Type: QD000P40CD; Serial: S/N:1796
- Measurement SW: DASY52, Version 52.8 (8); SEMCAD X Version 14.6.10 (7331)

Configuration/Pin=250mW/Area Scan (61x61x1): Interpolated grid: dx=1.500 mm, dy=1.500 mm
Maximum value of SAR (interpolated) = 2.64 W/kg

Configuration/Pin=250mW/Zoom Scan (5x5x7)/Cube 0: Measurement grid: dx=8mm, dy=8mm, dz=5mm
Reference Value = 54.15 V/m; Power Drift = 0.04 dB
Peak SAR (extrapolated) = 2.90 W/kg
SAR(1 g) = 2.05 W/kg; SAR(10 g) = 1.38 W/kg
Maximum value of SAR (measured) = 2.54 W/kg

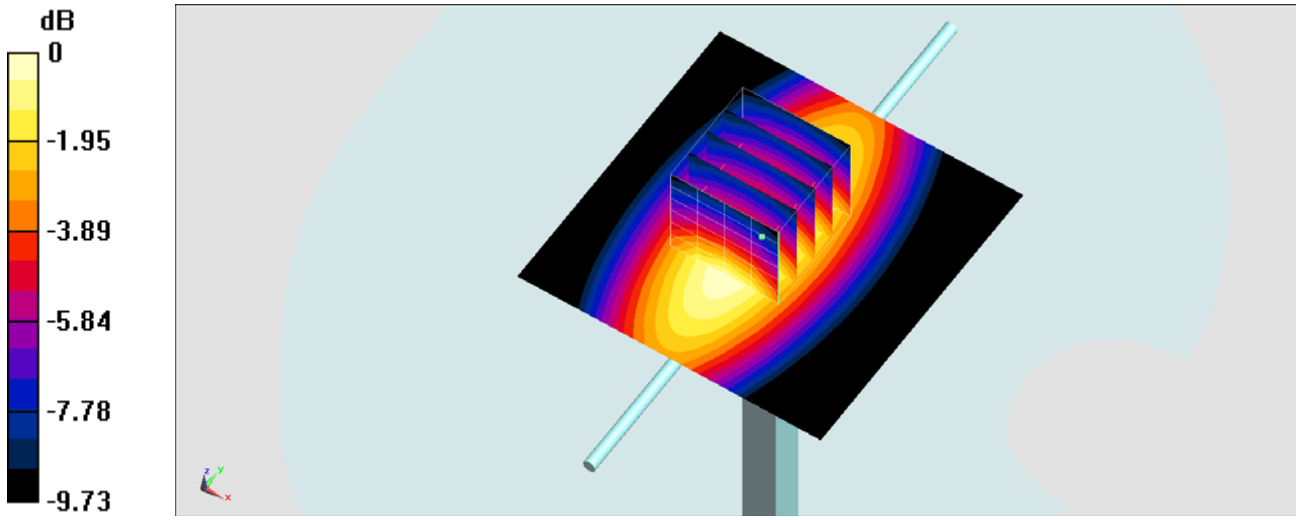

0 dB = 2.54 W/kg = 4.05 dBW/kg

System Check_Head_850MHz_150518

DUT: D835V2-SN:499

Communication System: CW ; Frequency: 835 MHz;Duty Cycle: 1:1
Medium: HSL_850_150518 Medium parameters used: f = 835 MHz; σ = 0.902 S/m; ε_r = 42.289; ρ = 1000 kg/m^3
Ambient Temperature：23.7 ℃； Liquid Temperature：22.7 ℃

DASY5 Configuration
- Probe: EX3DV4 - SN3578; ConvF(9.17, 9.17, 9.17); Calibrated: 2015/3/31;
- Sensor-Surface: 1.4mm (Mechanical Surface Detection)
- Electronics: DAE4 Sn778; Calibrated: 2014/8/21
- Phantom: SAM_Left; Type: QD000P40CD; Serial: S/N:1796
- Measurement SW: DASY52, Version 52.8 (8); SEMCAD X Version 14.6.10 (7331)

Configuration/Pin=250mW/Area Scan (61x61x1): Interpolated grid: dx=1.500 mm, dy=1.500 mm
Maximum value of SAR (interpolated) = 3.27 W/kg

Configuration/Pin=250mW/Zoom Scan (5x5x7)/Cube 0: Measurement grid: dx=8mm, dy=8mm, dz=5mm
Reference Value = 62.57 V/m; Power Drift = -0.1 dB
Peak SAR (extrapolated) = 3.41 W/kg
SAR(1 g) = 2.27 W/kg; SAR(10 g) = 1.51 W/kg
Maximum value of SAR (measured) = 3.00 W/kg

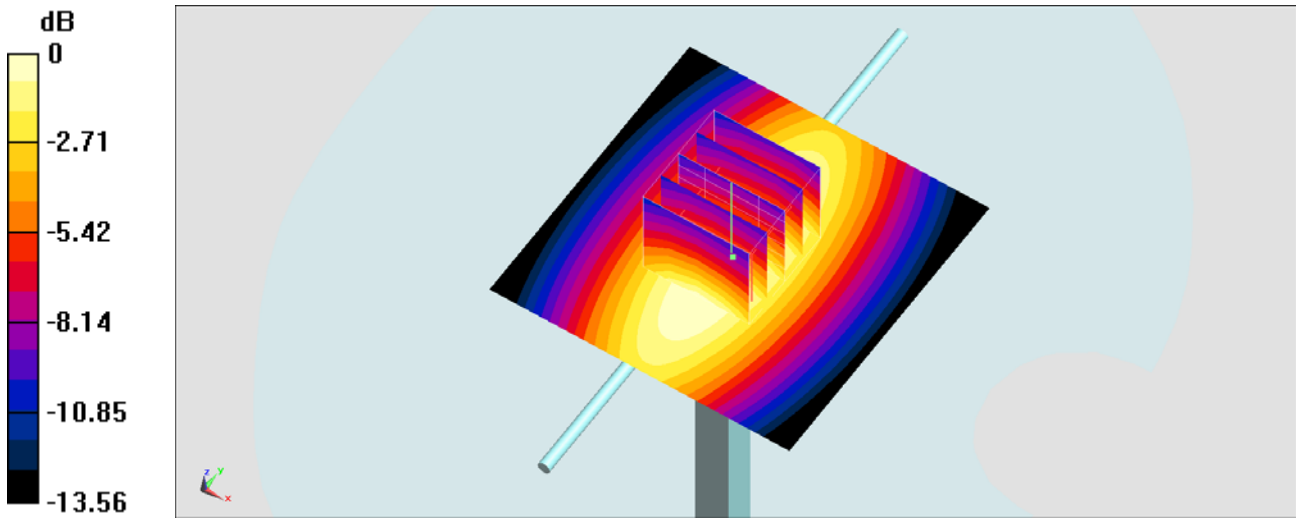

0 dB = 3.00 W/kg = 4.77 dBW/kg

System Check_Body_835MHz_150517

DUT: D835V2-SN:499

Communication System: CW; Frequency: 835 MHz;Duty Cycle: 1:1
Medium: MSL_850_150517 Medium parameters used: f = 835 MHz; σ = 0.986 S/m; ε_r = 56.013; ρ = 1000 kg/m^3
Ambient Temperature：23.3 ℃； Liquid Temperature：22.3 ℃

DASY5 Configuration
- Probe: EX3DV4 - SN3578; ConvF(9.27, 9.27, 9.27); Calibrated: 2015/3/31;
- Sensor-Surface: 1.4mm (Mechanical Surface Detection)
- Electronics: DAE4 Sn778; Calibrated: 2014/8/21
- Phantom: SAM_Left; Type: QD000P40CD; Serial: S/N:1796
- Measurement SW: DASY52, Version 52.8 (8); SEMCAD X Version 14.6.10 (7331)

Configuration/Pin=250mW/Area Scan (61x61x1): Interpolated grid: dx=1.500 mm, dy=1.500 mm
Maximum value of SAR (interpolated) = 3.38 W/kg

Configuration/Pin=250mW/Zoom Scan (5x5x7)/Cube 0: Measurement grid: dx=8mm, dy=8mm, dz=5mm
Reference Value = 60.99 V/m; Power Drift = -0.13 dB
Peak SAR (extrapolated) = 3.50 W/kg
SAR(1 g) = 2.35 W/kg; SAR(10 g) = 1.56 W/kg
Maximum value of SAR (measured) = 3.09 W/kg

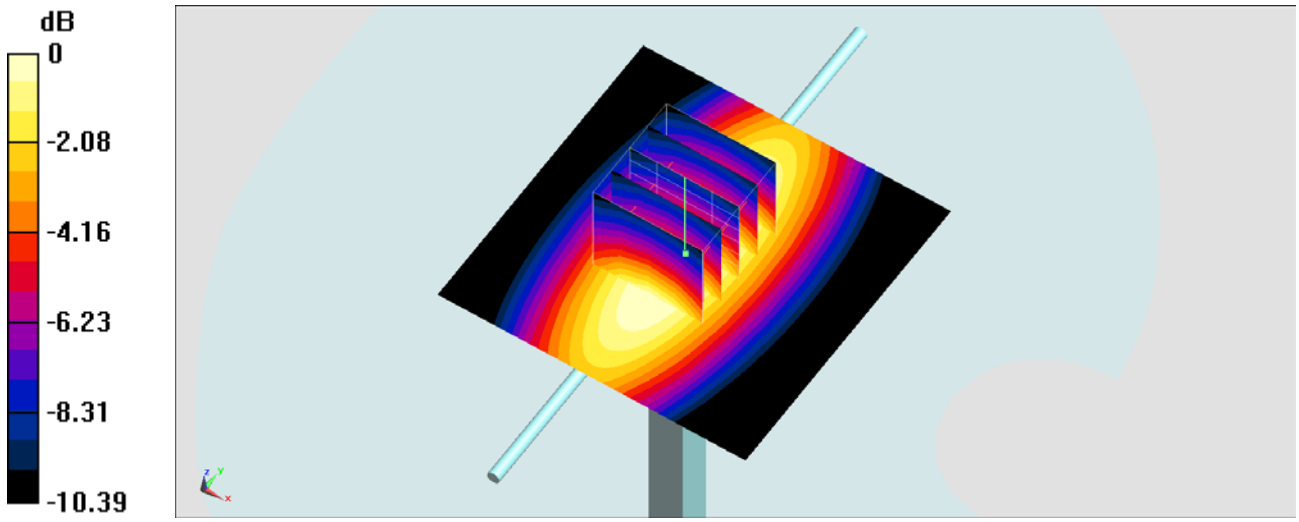

0 dB = 3.09 W/kg = 4.90 dBW/kg

System Check_Head_1750MHz_150519

DUT: D1750V2-SN:1137

Communication System: CW; Frequency: 1750 MHz;Duty Cycle: 1:1
Medium: HSL_1750_150519 Medium parameters used: f = 1750 MHz; σ = 1.359 S/m; ε_r = 39.874; ρ = 1000 kg/m^3
Ambient Temperature：23.4 ℃； Liquid Temperature：22.4 ℃

DASY5 Configuration
- Probe: EX3DV4 - SN3578; ConvF(7.96, 7.96, 7.96); Calibrated: 2015/3/31;
- Sensor-Surface: 1.4mm (Mechanical Surface Detection)
- Electronics: DAE4 Sn778; Calibrated: 2014/8/21
- Phantom: SAM_Left; Type: QD000P40CD; Serial: S/N:1796
- Measurement SW: DASY52, Version 52.8 (8); SEMCAD X Version 14.6.10 (7331)

Configuration/Pin=250mW/Area Scan (61x61x1): Interpolated grid: dx=1.500 mm, dy=1.500 mm
Maximum value of SAR (interpolated) = 12.9 W/kg

Configuration/Pin=250mW/Zoom Scan (5x5x7)/Cube 0: Measurement grid: dx=8mm, dy=8mm, dz=5mm
Reference Value = 100.8 V/m; Power Drift = -0.00 dB
Peak SAR (extrapolated) = 15.1 W/kg
SAR(1 g) = 8.44 W/kg; SAR(10 g) = 4.54 W/kg
Maximum value of SAR (measured) = 12.7 W/kg

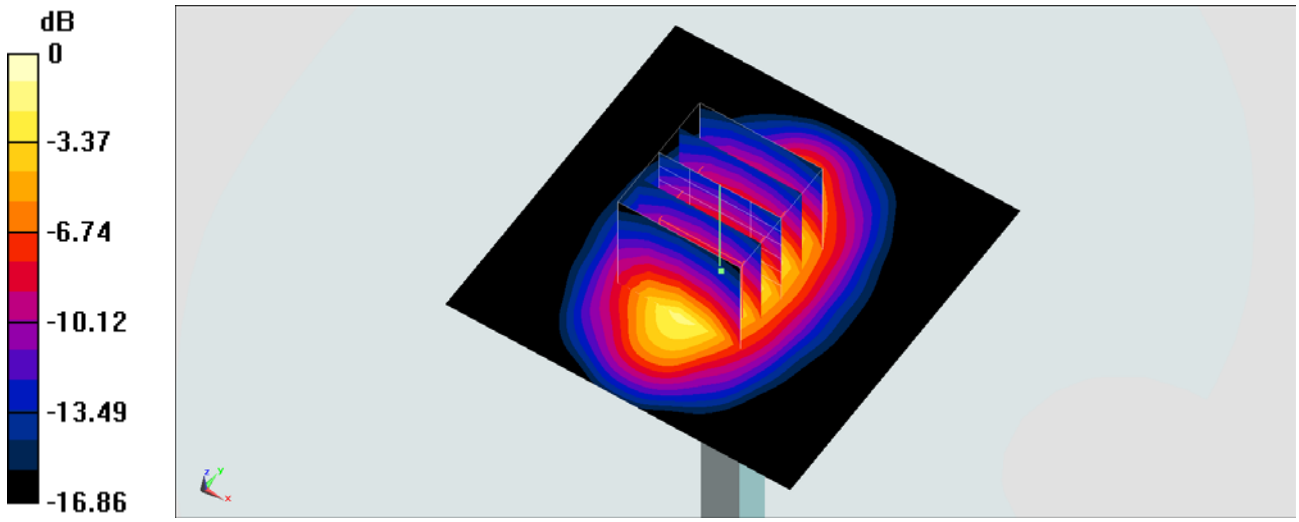

0 dB = 12.7 W/kg = 11.04 dBW/kg

System Check_Body_1750MHz_150517

DUT: D1750V2-SN:1137

Communication System: CW; Frequency: 1750 MHz;Duty Cycle: 1:1
Medium: MSL_1750_150517 Medium parameters used: f = 1750 MHz; σ = 1.532 S/m; ε_r = 54.004; ρ = 1000 kg/m^3
Ambient Temperature：23.4 ℃； Liquid Temperature：22.4 ℃

DASY5 Configuration
- Probe: EX3DV4 - SN3578; ConvF(7.65, 7.65, 7.65); Calibrated: 2015/3/31;
- Sensor-Surface: 1.4mm (Mechanical Surface Detection)
- Electronics: DAE4 Sn778; Calibrated: 2014/8/21
- Phantom: SAM_Left; Type: QD000P40CD; Serial: S/N:1796
- Measurement SW: DASY52, Version 52.8 (8); SEMCAD X Version 14.6.10 (7331)

Configuration/Pin=250mW/Area Scan (61x61x1): Interpolated grid: dx=1.500 mm, dy=1.500 mm
Maximum value of SAR (interpolated) = 13.3 W/kg

Configuration/Pin=250mW/Zoom Scan (5x5x7)/Cube 0: Measurement grid: dx=8mm, dy=8mm, dz=5mm
Reference Value = 91.61 V/m; Power Drift = 0.00 dB
Peak SAR (extrapolated) = 15.5 W/kg
SAR(1 g) = 8.85 W/kg; SAR(10 g) = 4.74 W/kg
Maximum value of SAR (measured) = 13.3 W/kg

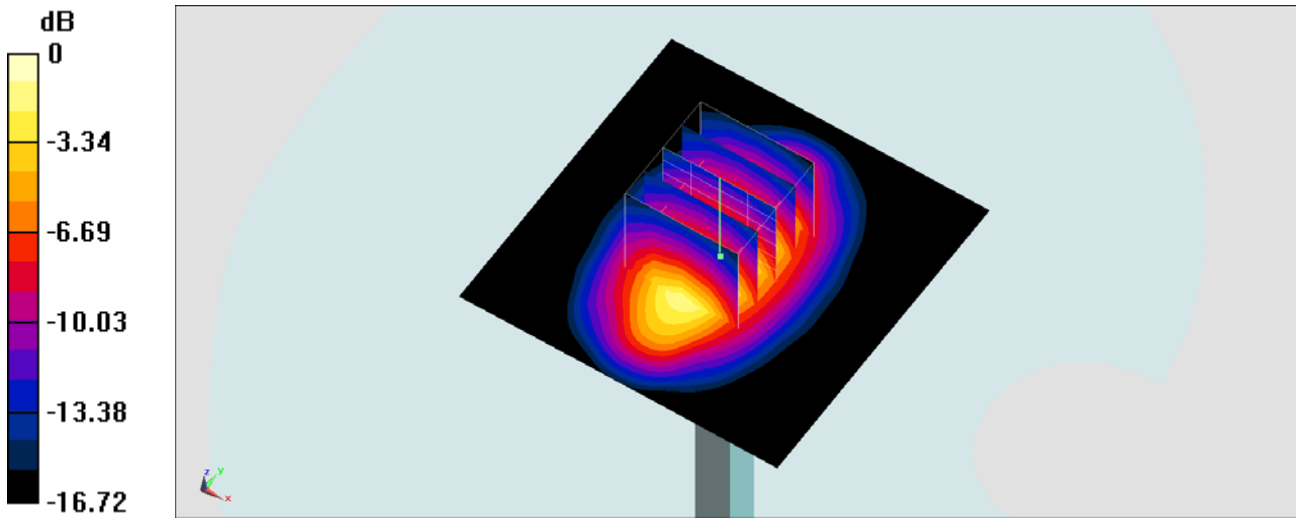

0 dB = 13.3 W/kg = 11.24 dBW/kg

System Check_Head_1900MHz_150519

DUT: D1900V2-SN:5d041

Communication System: CW; Frequency: 1900 MHz;Duty Cycle: 1:1
Medium: HSL_1900_150519 Medium parameters used: f = 1900 MHz; σ = 1.428 S/m; ε_r = 39.24; ρ = 1000 kg/m^3
Ambient Temperature：23.4 ℃； Liquid Temperature：22.4 ℃

DASY5 Configuration
- Probe: EX3DV4 - SN3578; ConvF(7.77, 7.77, 7.77); Calibrated: 2015/3/31;
- Sensor-Surface: 1.4mm (Mechanical Surface Detection)
- Electronics: DAE4 Sn778; Calibrated: 2014/8/21
- Phantom: SAM_Left; Type: QD000P40CD; Serial: S/N:1796
- Measurement SW: DASY52, Version 52.8 (8); SEMCAD X Version 14.6.10 (7331)

Configuration/Pin=250mW/Area Scan (61x61x1): Interpolated grid: dx=1.500 mm, dy=1.500 mm
Maximum value of SAR (interpolated) = 14.5 W/kg

Configuration/Pin=250mW/Zoom Scan (5x5x7)/Cube 0: Measurement grid: dx=8mm, dy=8mm, dz=5mm
Reference Value = 87.53 V/m; Power Drift = 0.13 dB
Peak SAR (extrapolated) = 17.8 W/kg
SAR(1 g) = 9.32 W/kg; SAR(10 g) = 4.71 W/kg
Maximum value of SAR (measured) = 14.6 W/kg

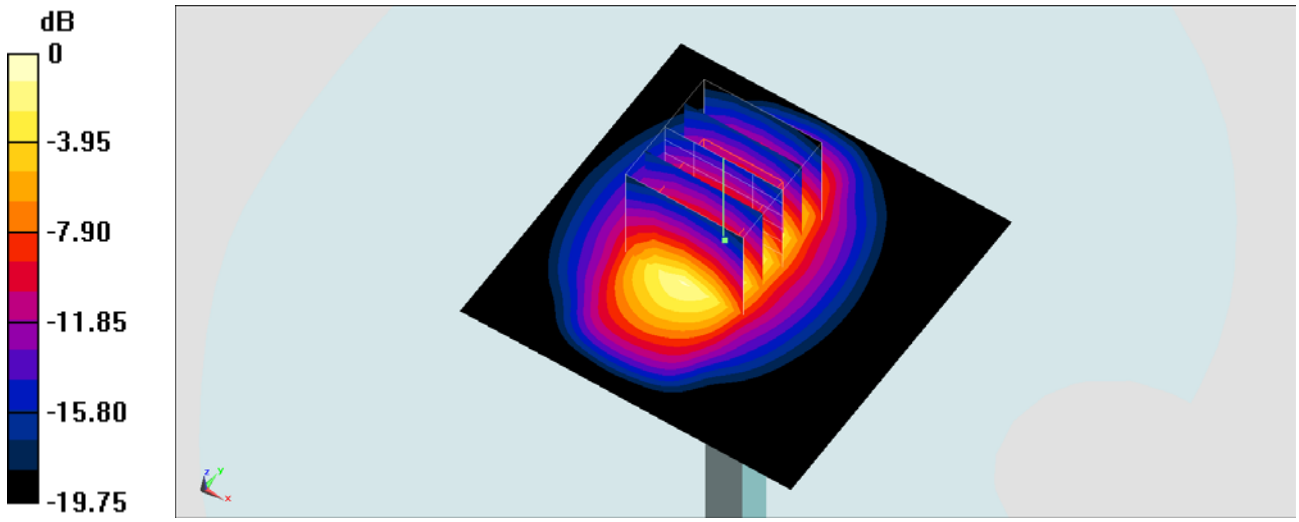

0 dB = 14.6 W/kg = 11.64 dBW/kg

Test Laboratory: Sporton International Inc. SAR/HAC Testing Lab Date: 2015/5/17

System Check_Body_1900MHz_150517

DUT: D1900V2_SN:5d041

Communication System: CW; Frequency: 1900 MHz;Duty Cycle: 1:1
Medium: MSL_1900_150517 Medium parameters used: f = 1900 MHz; σ = 1.556 S/m; ε_r = 55.366; ρ = 1000 kg/m^3
Ambient Temperature：23.5 ℃； Liquid Temperature：22.5 ℃

DASY5 Configuration
- Probe: EX3DV4 - SN3578; ConvF(7.28, 7.28, 7.28); Calibrated: 2015/3/31;
- Sensor-Surface: 1.4mm (Mechanical Surface Detection)
- Electronics: DAE4 Sn778; Calibrated: 2014/8/21
- Phantom: SAM_Left; Type: QD000P40CD; Serial: S/N:1796
- Measurement SW: DASY52, Version 52.8 (8); SEMCAD X Version 14.6.10 (7331)

Configuration/Pin=250mW/Area Scan (61x61x1): Interpolated grid: dx=1.500 mm, dy=1.500 mm
Maximum value of SAR (interpolated) = 14.9 W/kg

Configuration/Pin=250mW/Zoom Scan (5x5x7)/Cube 0: Measurement grid: dx=8mm, dy=8mm, dz=5mm
Reference Value = 101.9 V/m; Power Drift = -0.00 dB
Peak SAR (extrapolated) = 17.5 W/kg
SAR(1 g) = 9.62 W/kg; SAR(10 g) = 4.96 W/kg
Maximum value of SAR (measured) = 14.9 W/kg

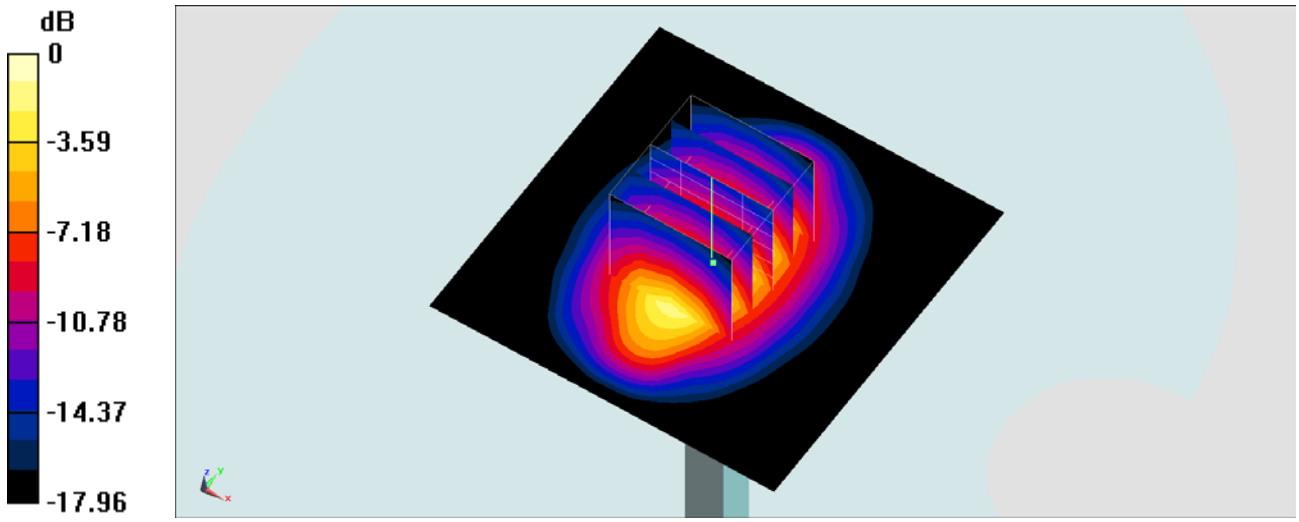

0 dB = 14.9 W/kg = 11.73 dBW/kg

Test Laboratory: Sporton International Inc. SAR/HAC Testing Lab Date: 2015/5/20

System Check_Head_2450MHz_150520

DUT: D2450V2-SN:924

Communication System: CW; Frequency: 2450 MHz;Duty Cycle: 1:1
Medium: HSL_2450_150520 Medium parameters used: f = 2450 MHz; σ = 1.855 mho/m; ε_r = 39.47; ρ = 1000 kg/m^3
Ambient Temperature：23.3 ℃； Liquid Temperature：22.3 ℃

DASY5 Configuration:
- Probe: EX3DV4 - SN3955; ConvF(7.46, 7.46, 7.46); Calibrated: 2014/11/21;
- Sensor-Surface: 1.4mm (Mechanical Surface Detection)
- Electronics: DAE4 Sn1399; Calibrated: 2014/11/13
- Phantom: SAM_Right; Type: QD000P40CC; Serial: TP:1383
- Measurement SW: DASY52, Version 52.8 (2);SEMCAD X Version 14.6.6 (6477)

Configuration/Pin=250mW/Area Scan (51x51x1): Measurement grid: dx=15mm, dy=15mm
Maximum value of SAR (interpolated) = 20.5 mW/g

Configuration/Pin=250mW/Zoom Scan (5x5x7)/Cube 0: Measurement grid: dx=8mm, dy=8mm, dz=5mm
Reference Value = 95.852 V/m; Power Drift = 0.15 dB
Peak SAR (extrapolated) = 26.056 mW/g
SAR(1 g) = 12.4 mW/g; SAR(10 g) = 5.65 mW/g
Maximum value of SAR (measured) = 18.7 mW/g

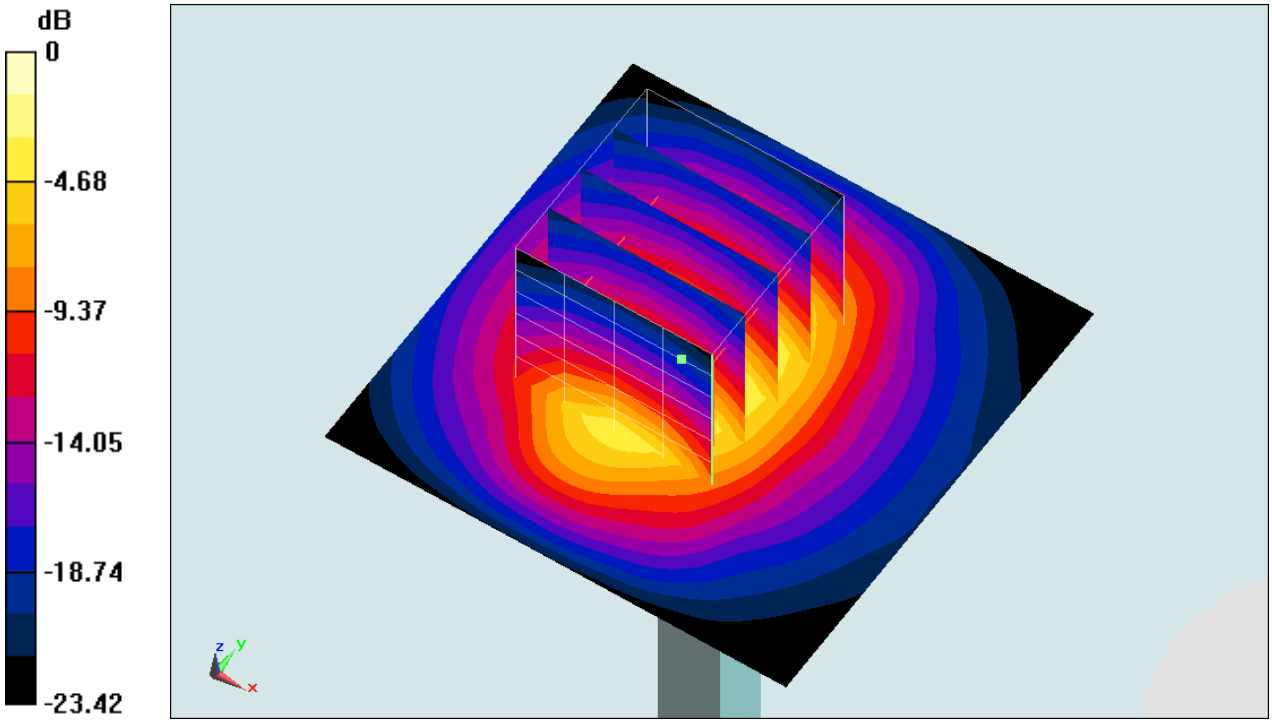

0 dB = 18.7 mW/g = 25.44 dB mW/g

Test Laboratory: Sporton International Inc. SAR/HAC Testing Lab Date: 2015/5/21

System Check_Head_2450MHz_150521

DUT: D2450V2-SN:924

Communication System: CW; Frequency: 2450 MHz;Duty Cycle: 1:1
Medium: HSL_2450_150521 Medium parameters used: f = 2450 MHz; σ = 1.845 S/m; ε_r = 39.275; ρ = 1000 kg/m^3
Ambient Temperature：23.3 ℃； Liquid Temperature：22.3 ℃

DASY5 Configuration
- Probe: EX3DV4 - SN3578; ConvF(7.11, 7.11, 7.11); Calibrated: 2015/3/31;
- Sensor-Surface: 1.4mm (Mechanical Surface Detection)
- Electronics: DAE4 Sn778; Calibrated: 2014/8/21
- Phantom: SAM_RIGHT; Type: QD000P40CD; Serial: 1719
- Measurement SW: DASY52, Version 52.8 (7); SEMCAD X Version 14.6.10 (7164)

Configuration/Pin=250mW/Area Scan (81x81x1): Interpolated grid: dx=1.200 mm, dy=1.200 mm
Maximum value of SAR (interpolated) = 18.6 W/kg

Configuration/Pin=250mW/Zoom Scan (7x7x7)/Cube 0: Measurement grid: dx=5mm, dy=5mm, dz=5mm
Reference Value = 104.6 V/m; Power Drift = 0.13 dB
Peak SAR (extrapolated) = 25.1 W/kg
SAR(1 g) = 12.3 W/kg; SAR(10 g) = 5.74 W/kg
Maximum value of SAR (measured) = 20.5 W/kg

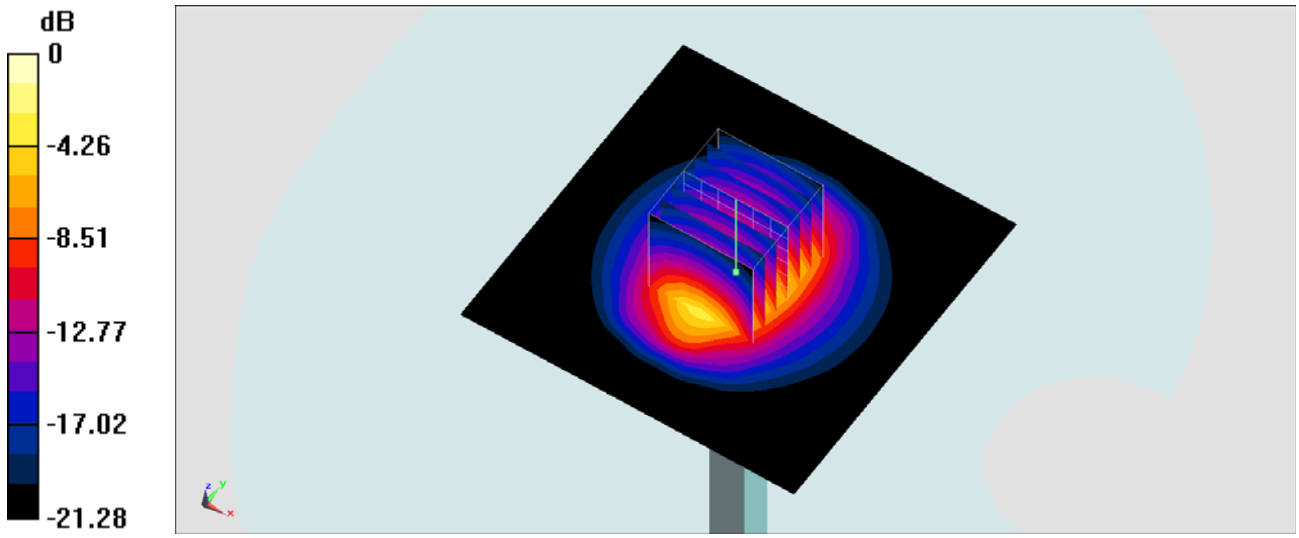

0 dB = 20.5 W/kg = 13.12 dBW/kg

Test Laboratory: Sporton International Inc. SAR/HAC Testing Lab Date: 2015/5/20

System Check_Body_2450MHz_150520

DUT: D2450V2-SN:924

Communication System: CW; Frequency: 2450 MHz;Duty Cycle: 1:1
Medium: MSL_2450_150520 Medium parameters used: f = 2450 MHz; σ = 2.032 mho/m; ε_r = 51.914; ρ = 1000 kg/m^3
Ambient Temperature：23.3 ℃； Liquid Temperature：22.3 ℃

DASY5 Configuration:
- Probe: EX3DV4 - SN3955; ConvF(7.32, 7.32, 7.32); Calibrated: 2014/11/21;
- Sensor-Surface: 1.4mm (Mechanical Surface Detection)
- Electronics: DAE4 Sn1399; Calibrated: 2014/11/13
- Phantom: SAM_Left; Type: QD000P40CD; Serial: TP:1542
- Measurement SW: DASY52, Version 52.8 (2);SEMCAD X Version 14.6.6 (6477)

Configuration/Pin=250mW/Area Scan (61x61x1): Measurement grid: dx=12mm, dy=12mm
Maximum value of SAR (interpolated) = 20.3 mW/g

Configuration/Pin=250mW/Zoom Scan (7x7x7)/Cube 0: Measurement grid: dx=5mm, dy=5mm, dz=5mm
Reference Value = 104.3 V/m; Power Drift = -0.01 dB
Peak SAR (extrapolated) = 24.923 mW/g
SAR(1 g) = 12.2 mW/g; SAR(10 g) = 5.65 mW/g
Maximum value of SAR (measured) = 20.3 mW/g

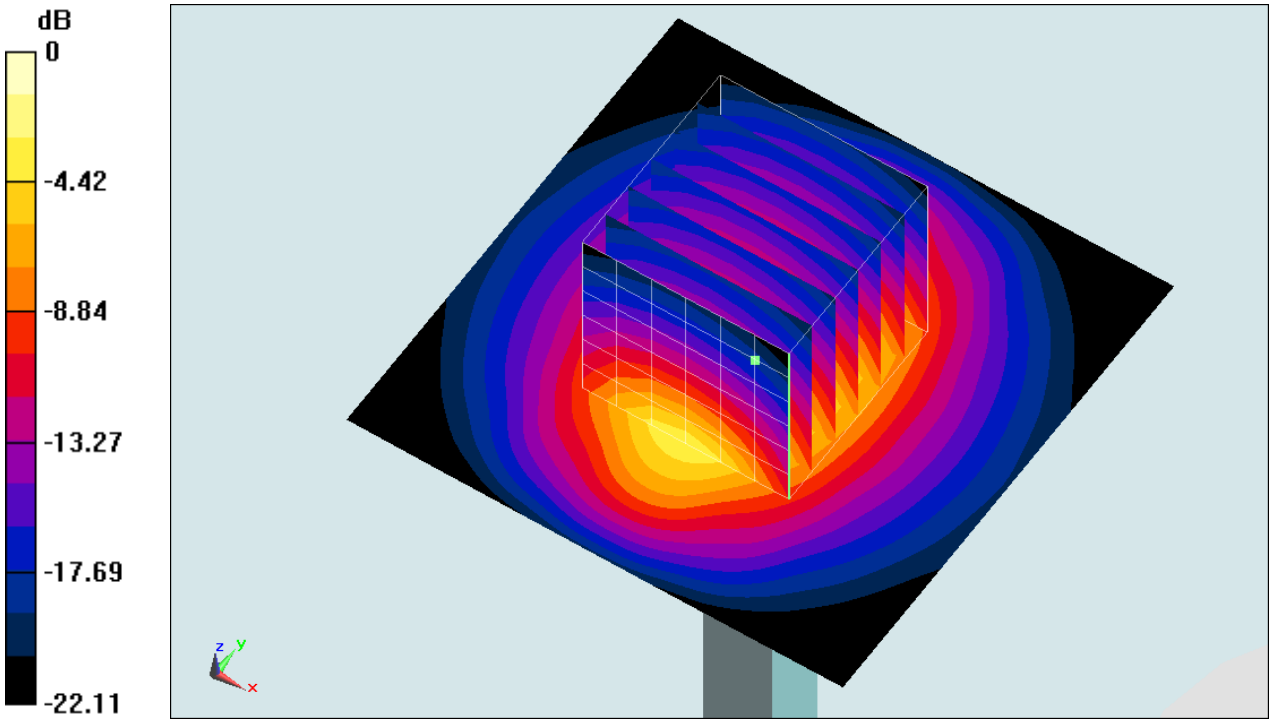

0 dB = 20.3 mW/g = 26.15 dB mW/g

System Check_Body_2450MHz_150521

DUT: D2450V2-SN:924

Communication System: CW; Frequency: 2450 MHz;Duty Cycle: 1:1
Medium: MSL_2450_150521 Medium parameters used: f = 2450 MHz; σ = 1.929 S/m; ε_r = 52.48; ρ = 1000 kg/m^3
Ambient Temperature：23.4 ℃； Liquid Temperature：22.4 ℃

DASY5 Configuration
- Probe: EX3DV4 - SN3578; ConvF(6.95, 6.95, 6.95); Calibrated: 2015/3/31;
- Sensor-Surface: 1.4mm (Mechanical Surface Detection)
- Electronics: DAE4 Sn778; Calibrated: 2014/8/21
- Phantom: SAM_RIGHT; Type: QD000P40CD; Serial: 1719
- Measurement SW: DASY52, Version 52.8 (7); SEMCAD X Version 14.6.10 (7164)

Configuration/Pin=250mW/Area Scan (71x71x1): Interpolated grid: dx=1.200 mm, dy=1.200 mm
Maximum value of SAR (interpolated) = 18.9 W/kg

Configuration/Pin=250mW/Zoom Scan (7x7x7)/Cube 0: Measurement grid: dx=5mm, dy=5mm, dz=5mm
Reference Value = 96.596 V/m; Power Drift = -0.13 dB
Peak SAR (extrapolated) = 30.5 W/kg
SAR(1 g) = 13.6 W/kg; SAR(10 g) = 6.19 W/kg
Maximum value of SAR (measured) = 18.0 W/kg

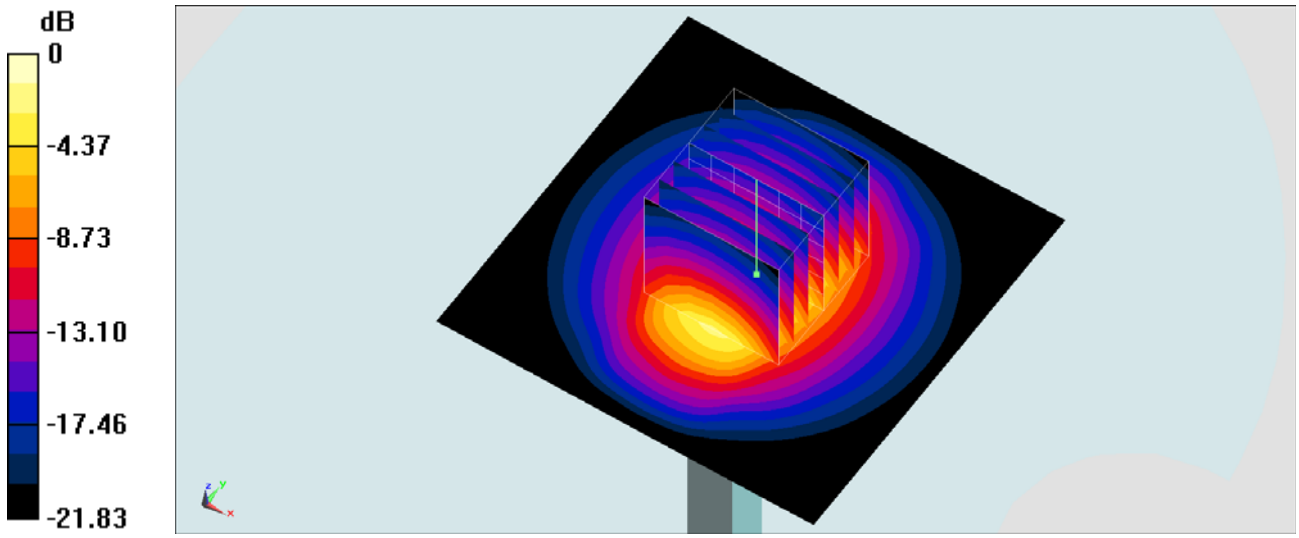

0 dB = 18.0 W/kg = 12.55 dBW/kg

Test Laboratory: Sporton International Inc. SAR/HAC Testing Lab Date: 2015/5/20

System Check_Head_2600MHz_150520

DUT: D2600V2-SN:1070

Communication System: CW ; Frequency: 2600 MHz;Duty Cycle: 1:1
Medium: HSL_2600_150520 Medium parameters used: f = 2600 MHz; σ = 2.032 mho/m; ε_r = 37.833; ρ = 1000 kg/m^3
Ambient Temperature：23.3 ℃； Liquid Temperature：22.3 ℃

DASY5 Configuration:
- Probe: EX3DV4 - SN3955; ConvF(7.21, 7.21, 7.21); Calibrated: 2014/11/21;
- Sensor-Surface: 1.4mm (Mechanical Surface Detection)
- Electronics: DAE4 Sn1399; Calibrated: 2014/11/13
- Phantom: SAM_Right; Type: QD000P40CC; Serial: TP:1383
- Measurement SW: DASY52, Version 52.8 (2);SEMCAD X Version 14.6.6 (6477)

Configuration/Pin=250mW/Area Scan (61x61x1): Measurement grid: dx=12mm, dy=12mm
Maximum value of SAR (interpolated) = 25.5 mW/g

Configuration/Pin=250mW/Zoom Scan (7x7x7)/Cube 0: Measurement grid: dx=5mm, dy=5mm, dz=5mm
Reference Value = 116.3 V/m; Power Drift = -0.02 dB
Peak SAR (extrapolated) = 32.263 mW/g
SAR(1 g) = 14.4 mW/g; SAR(10 g) = 6.31 mW/g
Maximum value of SAR (measured) = 25.2 mW/g

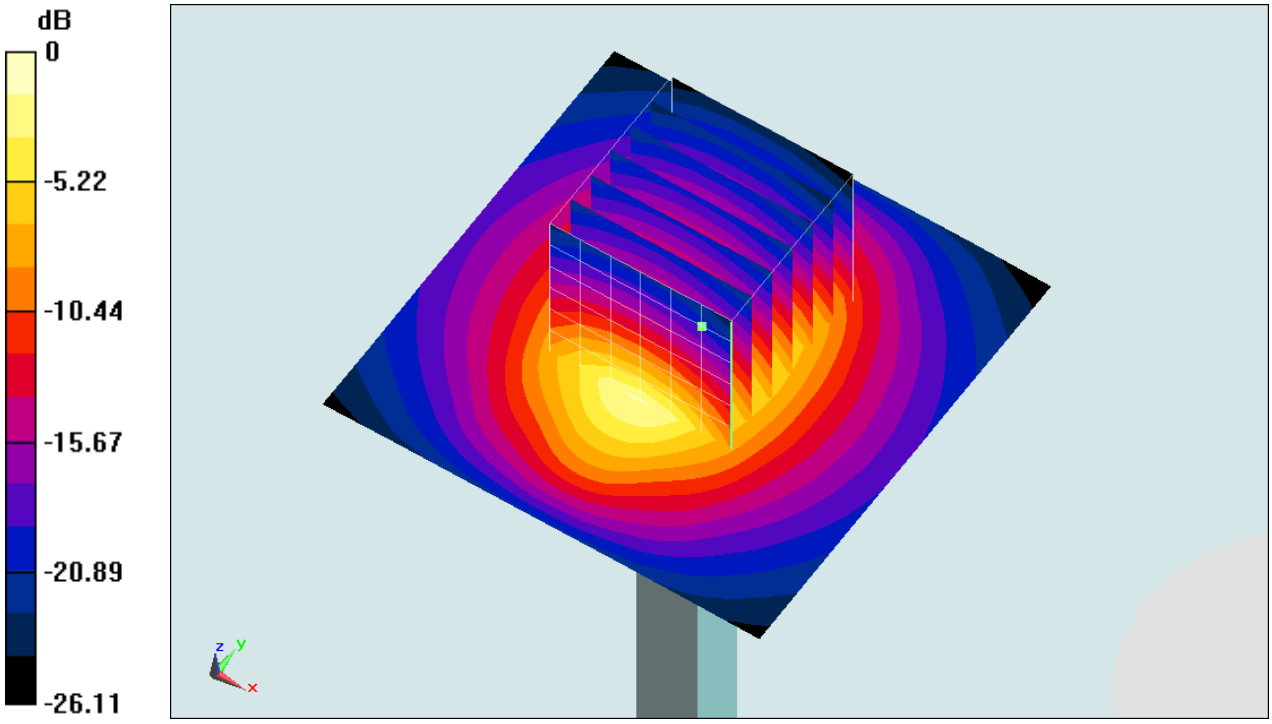

0 dB = 25.2 mW/g = 28.03 dB mW/g

System Check_Body_2600MHz_150516

DUT: D2600V2-SN:1070

Communication System: CW; Frequency: 2600 MHz;Duty Cycle: 1:1
Medium: MSL_2600_150516 Medium parameters used: f = 2600 MHz; σ = 2.225 S/m; ε_r = 52.835; ρ = 1000 kg/m^3
Ambient Temperature：23.6 ℃； Liquid Temperature：22.6 ℃

DASY5 Configuration
- Probe: EX3DV4 - SN3578; ConvF(6.69, 6.69, 6.69); Calibrated: 2015/3/31;
- Sensor-Surface: 1.4mm (Mechanical Surface Detection)
- Electronics: DAE4 Sn778; Calibrated: 2014/8/21
- Phantom: SAM_Left; Type: QD000P40CD; Serial: S/N:1796
- Measurement SW: DASY52, Version 52.8 (8); SEMCAD X Version 14.6.10 (7331)

Configuration/Pin=250mW/Area Scan (71x71x1): Interpolated grid: dx=1.200 mm, dy=1.200 mm
Maximum value of SAR (interpolated) = 23.8 W/kg

Configuration/Pin=250mW/Zoom Scan (7x7x7)/Cube 0: Measurement grid: dx=5mm, dy=5mm, dz=5mm
Reference Value = 104.2 V/m; Power Drift = 0.17 dB
Peak SAR (extrapolated) = 29.9 W/kg
SAR(1 g) = 13.9 W/kg; SAR(10 g) = 6.14 W/kg
Maximum value of SAR (measured) = 23.7 W/kg

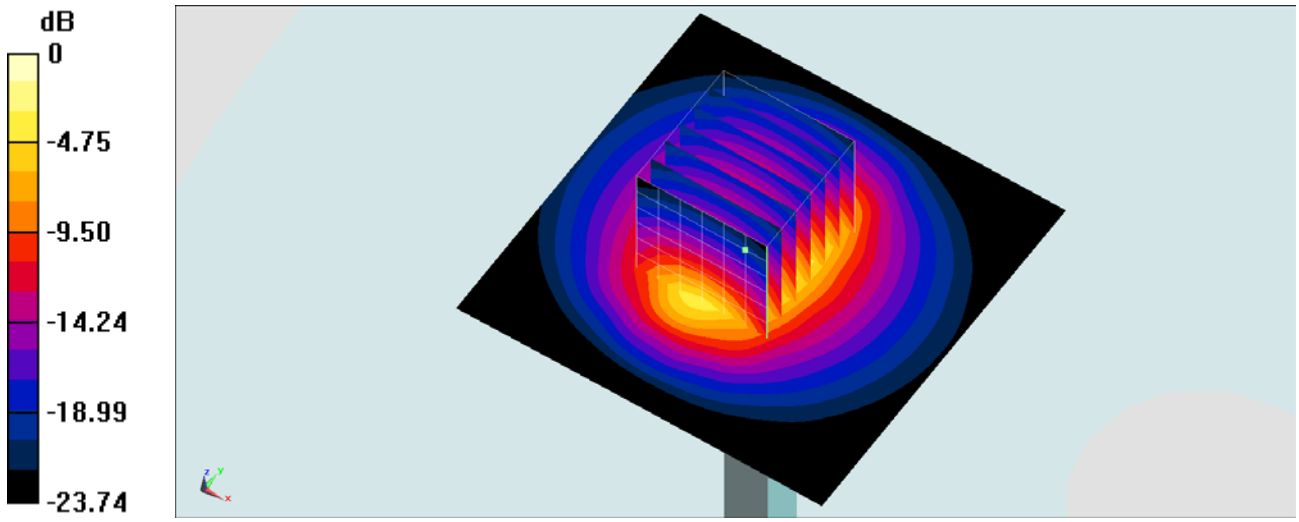

0 dB = 23.7 W/kg = 13.75 dBW/kg