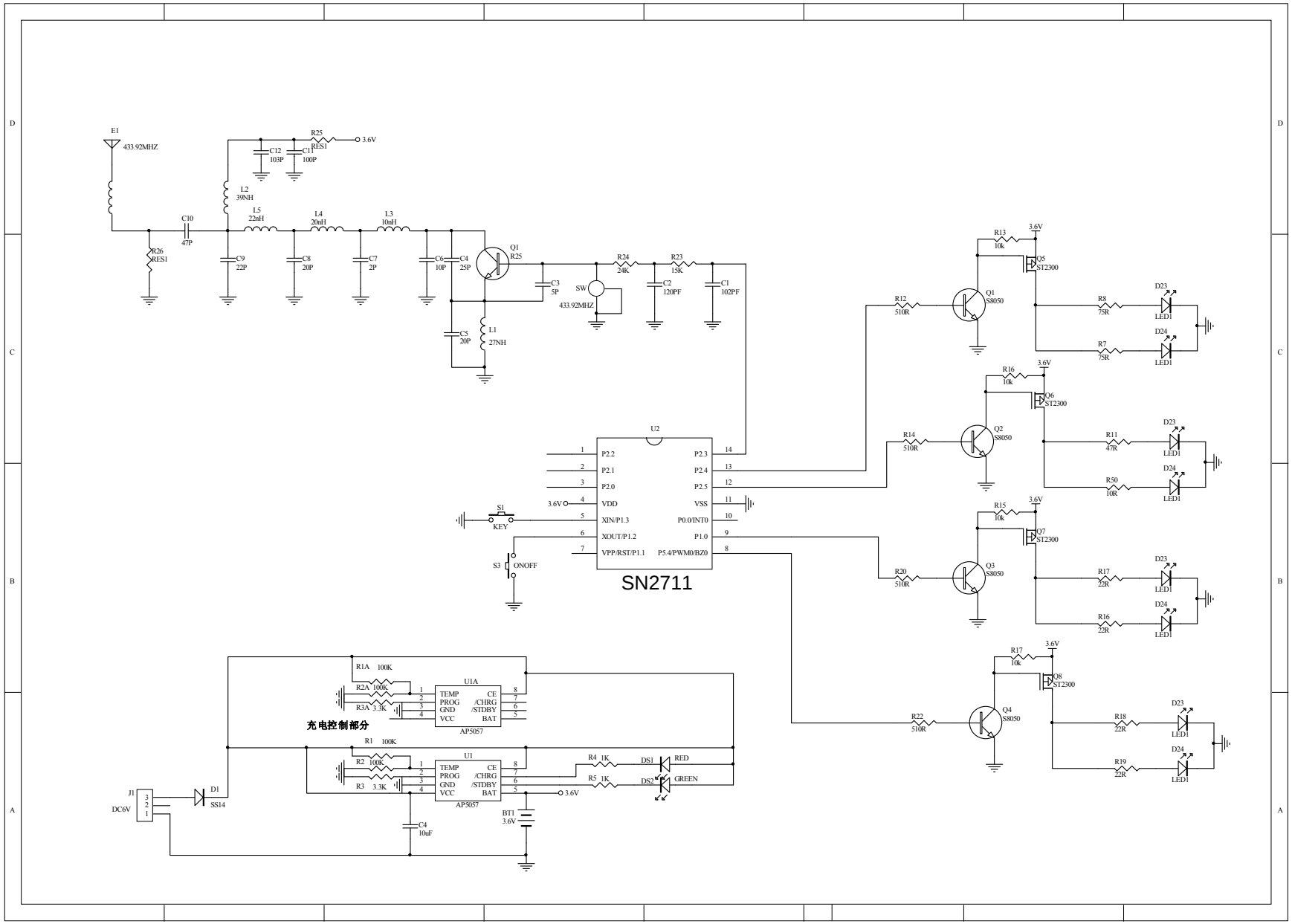
E1
433.92MHZ
R26
RES1
C10
47P
C9
22P
L2
39NH
C12
103P
R25
RES1
3.6V
C11
100P
L5
22nH
C8
20P
L4
20nH
C7
2P
L3
10nH
C6
10P
C4
25P
C5
20P
Q1
R25
L1
27NH
C3
5P
SW
433.92MHZ
R24
24K
R23
15K
C2
120PF
C1
102PF
U2
P2.2
P2.1
P2.0
VDD
XIN/P1.3
XOUT/P1.2
VPP/RST/P1.1
P2.3
P2.4
P2.5
VSS
P0.0/INT0
P1.0
P5.4/PWM0/BZ0
S1
KEY
S3
ONOFF
SN2711
R13
10k
Q5
ST2300
R12
510R
Q1
S8050
R8
75R
D23
LED1
R7
75R
D24
LED1
R16
10k
Q6
ST2300
R14
510R
Q2
S8050
R11
47R
R50
10R
R15
10k
Q7
ST2300
R20
510R
Q3
S8050
R17
22R
R16
22R
R17
10k
Q8
ST2300
R22
510R
Q4
S8050
R18
22R
R19
22R
R1A 100K
R2A 100K
R3A 3.3K
U1A
TEMP
PROG
GND
VCC
CE
/CHRG
/STDBY
BAT
AP5057
充电控制部分
R1 100K
R2 100K
R3 3.3K
U1
AP5057
R4 1K
R5 1K
DS1
RED
DS2
GREEN
J1
DC6V
D1
SS14
C4
10uF
BT1
3.6V