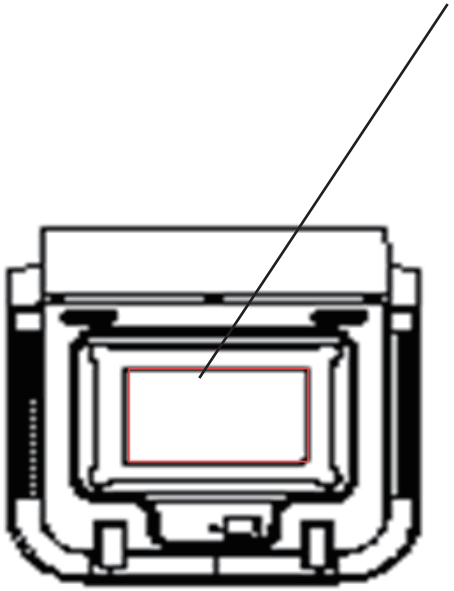

150mm

90mm

Blueair

Model/**Modèle:** 7712371000
Input/**Tension d'entrée:** 120VAC 60Hz
Power Consumption/
Consommation d'énergie: 76W 1.1A
Motor Voltage, Current/
Tension, Courant du moteur: 310VDC, 0.282A
Article No./**Numéro de l'article:** 105835
Filter Type/**Type de filtre:** SmartFilter

Contains/Contient
FCC ID: 2AC7Z-ESP32WROVERE
Contains/Contient
IC: 21098-ESPWROVERE
FCC ID: 2AEX5-77XX
IC: 20267-77XX

This device complies with Part 15 of the FCC Rules.
Operation is subject to the following two conditions:
(1) this device may not cause harmful interference, and (2) this device must accept any interference received, including interference that may cause undesired operation.

Manufacturing date (YYWW):

UPC/EAN: 689122015088

C LISTED US

Intertek
5018494

Conforms to
UL STD.867
Certified to:
CSA STD E60335-2-65
CSA STD C22.2 No. 60335-1

Serial No./Numéro de série:

Designed in Sweden. Made in China.
Conçu en Suède. Fabriqué en Chine.

CAUTION: HIGH VOLTAGE INSIDE

CAUTION: THIS EQUIPMENT SHOULD BE INSPECTED FREQUENTLY AND COLLECTED DIRT REMOVED FROM IT REGULARLY TO PREVENT EXCESSIVE ACCUMULATION THAT MAY RESULT IN FLASHOVER OR A RISK OF FIRE.

ATTENTION: HAUTE TENSION

ATTENTION: CET APPAREIL DEVRAIT FAIRE L'OBJET D'UNE INSPECTION ET LES FILTRES DEVRAIENT ÊTRE NETTOYÉS CONFORMÉMENT AUX INSTRUCTIONS DU FABRICANT, DE FAÇON RÉGULIÈRE, AFIN D'EMPÊCHER UNE ACCUMULATION EXCESSIVE DE POUSSIÈRE POUVANT PROVOQUER UN EMBRASEMENT ÉCLAIR OU CAUSER UN RISQUE D'INCENDIE.

105835