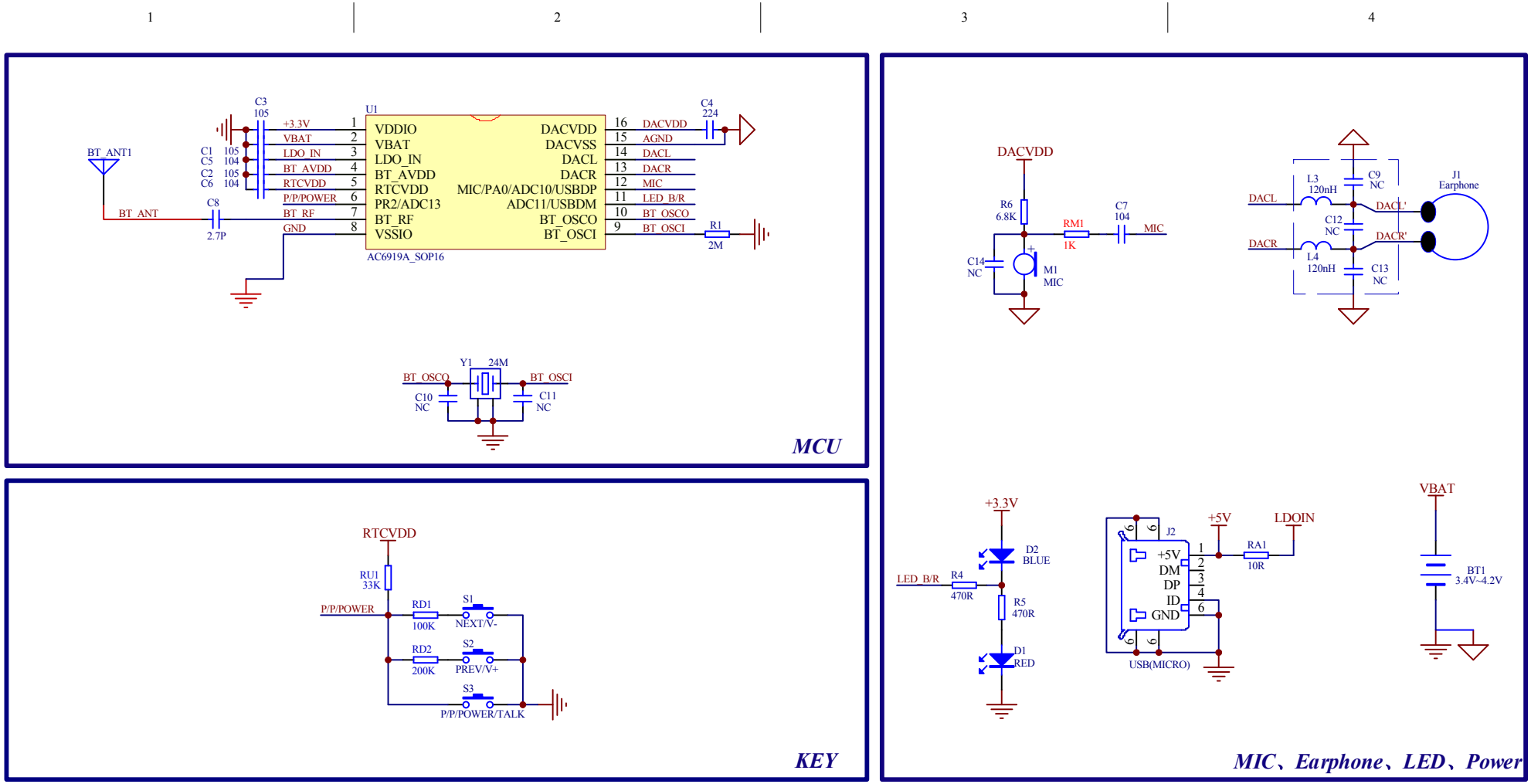
U1
VDDIO
VBAT
LDO_IN
BT_AVDD
RTCVDD
PR2/ADC13
BT_RF
VSSIO
DACVDD
DACVSS
DACL
DACR
MIC/PA0/ADC10/USBDP
ADC11/USBDM
BT_OSCO
BT_OSCI
AC6919A_SOP16
+3.3V
VBAT
LDO_IN
BT_AVDD
RTCVDD
P/P/POWER
BT_RF
GND
DACVDD
AGND
DACL
DACR
MIC
LED_B/R
BT_OSCO
BT_OSCI
C3 105
C1 105
C5 104
C2 105
C6 104
C4 224
R1 2M
BT_ANT1
BT_ANT
C8 2.7P
Y1 24M
C10 NC
C11 NC
MCU
RTCVDD
RU1 33K
P/P/POWER
RD1 100K
S1 NEXT/V-
RD2 200K
S2 PREV/V+
S3 P/P/POWER/TALK
KEY
DACVDD
R6 6.8K
RM1 1K
C7 104
MIC
C14 NC
M1 MIC
DACL
DACR
L3 120nH
L4 120nH
C9 NC
C12 NC
C13 NC
DACL'
DACR'
J1 Earphone
+3.3V
D2 BLUE
LED_B/R
R4 470R
R5 470R
D1 RED
J2
+5V
DM
DP
ID
GND
USB(MICRO)
+5V
LDOIN
RA1 10R
VBAT
BT1 3.4V~4.2V
MIC、Earphone、LED、Power