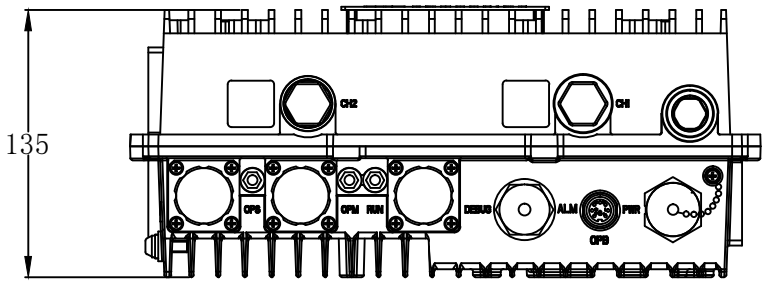
135
CH2
CH1
CP6
CP4
RUN
DEBUG
ALM
PWR
CP3

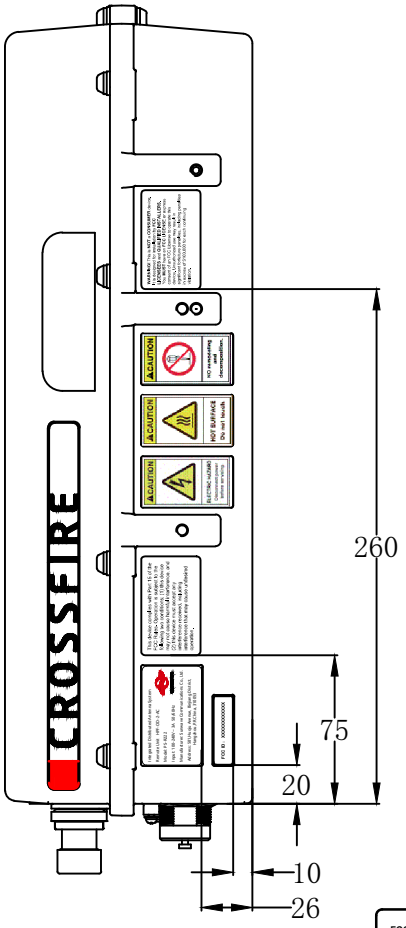
CROSSFIRE
260
75
20
10
26

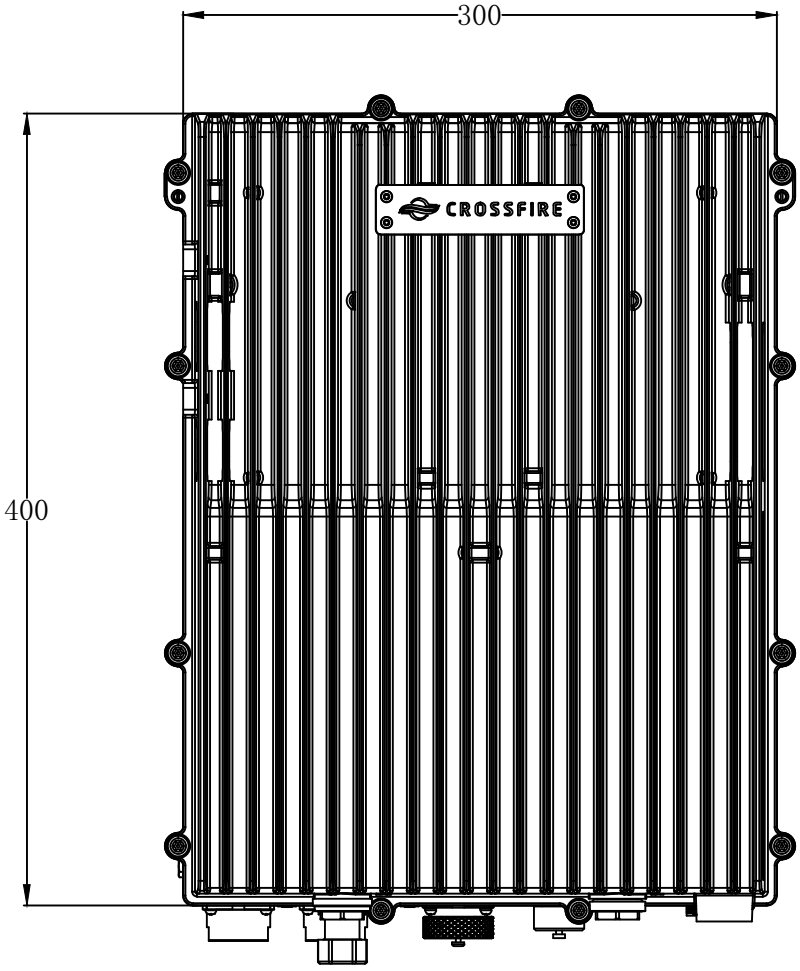
300
400
CROSSFIRE

FCC ID：2AEJ4R2220708
10
35