HEADRUSH

8042432/35

INSTRUCTION MANUAL

BLUETOOTH® SPEAKER WITH NFC

ORBIT

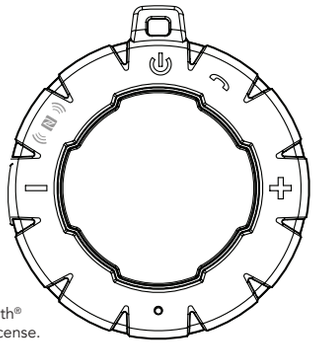

WHAT'S INCLUDED:

- Bluetooth® speaker
- USB to micro USB charging cable
- Carabiner
- User Manual

The Bluetooth® word mark and logos are registered trademarks owned by Bluetooth® SIG, Inc. and any use of such marks by The Source (Bell) Electronics Inc. is under license. Other trademarks and trade names are those of their respective owners.

FEATURES:

1. Bluetooth® 3.0
2. NFC Connectivity
3. Handsfree telephone calling
4. Stereo music
5. Operating distance up to 10m (33 ft.)
6. Operation time up to 8 hours (medium volume level)
7. IPX 6 Water-Resistant feature

COMPONENT IDENTIFICATION

1. Power ON/OFF
2. NFC connection location
3. Previous song/Volume –
4. Microphone
5. Next song/Volume +
6. Handsfree
7. USB charging jack

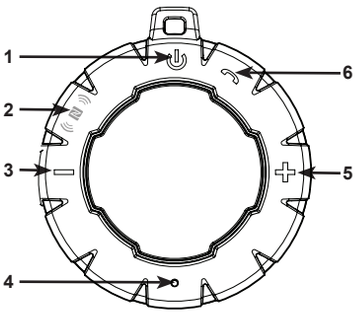

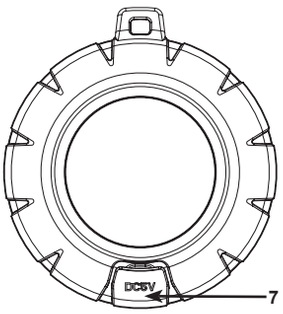

PRODUCT OVERVIEW

You can use this item with iPad®, iPhone®, iPod® and many types of smartphones to stream music, and enjoy handsfree calling. In order to get the best results when using this device, please read this manual first before using. This unit has IPX 6 rating: Protected against heavy seas – Water projected at all angles through a 12.5mm nozzle at a flow rate of 100 litres/min at a pressure of 100kN/m2 for 3 minutes from a distance of 3 metres/10 feet. **Do not submerge in water.**

PAIRING

In order to pair your audio device to your Bluetooth® Speaker for the first time, follow the steps below:

1). Make sure your audio source is held within three meters of your speaker.
2). Press and hold the "⏻" button on your speaker to power ON. The LED light will blink blue to indicate that you have entered pairing mode.
3). Go to the Bluetooth® Manager of your audio source. Please refer to the User's Manual of your audio source for more information.
4). Search Bluetooth® devices and select your speaker to start connecting. Look for name "HR Orbit".
5). Once paired, the blue LED light will be solid. You will hear a chime, and you can start listening to music.

Tip: The next time when you switch the speaker ON it will connect automatically as long as your Bluetooth® function is switched ON on your audio device.

When you disconnect the speaker while paired, the blue LED light will start to blink quickly, the speaker has entered into pairing mode. If there is no device paired within 5 minutes the speaker will turn OFF.

PAIRING BY ONE-TOUCH CONNECTION WITH NFC

1. Enable the NFC function on your device.
2. Use your NFC-enabled device and touch the NFC logo on the speaker.
3. Confirm the NFC connection on your device. This will vary depending on your device, check your device manual for compatibility.
4. The speaker will chime once paired.

CHARGING

This speaker has a built-in rechargeable Li-Ion battery. Fully charge the speaker before first use. Charge the battery as follows:

1. Connect one end of the included USB charging cable to the charging port on your speaker. Then plug the other end of the USB charging cable into a suitable port on your computer or 5V/1A power adapter (sold separately).
2. The red LED light will turn ON. When the charge is complete the red LED light will turn OFF.
3. It will take 2.5 hours to fully charge the speaker by PC USB port.

HANDSFREE SPEAKERPHONE

When a smartphone is connected to your speaker follow the steps below to take calls handsfree.

1. Short press the "📞" button to pick up the call.
2. Short press the "📞" button again to hang up the call.
3. Press and hold the "📞" button for 2 seconds to reject the call.

TO PLAY MUSIC FROM YOUR PC OR LAPTOP

After pairing the device to your PC or laptop, right-click on the speaker icon on the lower right hand corner of the task bar, select *"Playback devices"*. Under the *"Playback"* tab, the paired device will show within the list. To connect it, click on the device to set it as the default device. The audio will start to play from the paired device.

UNDERSTANDING THE LED STATUS LIGHTS

- **When charging your speaker**
  - Solid red LED=charging
  - Red LED OFF=charging complete
- **When pairing your speaker to a Bluetooth® device**
  - Quick blinking blue LED=Bluetooth® not connected, ready to pair
  - Slow blinking blue LED=Bluetooth® connected while playing music
  - Solid blue LED=Bluetooth® connected while not playing music

TECHNICAL SPECIFICATIONS

Carrier Frequency :	Bluetooth® 3.0
Battery Capacity :	3.7V, 600mAh
Frequency Response:	20Hz-20KHz
Operation Distance:	Up to 10 metres/33 feet
Output Power:	5W (Max)
Impedance:	4 Ohms

NOTE: This speaker is in compliance with the specified Bluetooth® version. It does not guarantee compatibility with all the functions on every Bluetooth® enabled device. Please check your mobile phone's user manual for compatibility and functionality.

TROUBLESHOOTING

Problem	Solution
The speaker doesn't connect to audio device	Speaker needs to be connected/re-paired to audio device
A tone is heard every few seconds	Speaker needs to be charged
Bluetooth® connection distance cannot reach 9.75m (32 ft.)	Avoid operating the Bluetooth® speaker in areas of strong electromagnetic interference, such as near induction cookers, large power fans, motors etc. Move the speaker closer to audio device. Fully charge the speaker and try again.
The speaker will not power ON	Speaker needs to be charged
The speaker doesn't control track(s)/ Volume	Speaker needs to be in Bluetooth® mode for full control
The speaker distorts at high volume	The device's volume needs to be lowered

WARNING: Changes or modifications to this unit not expressly approved by the party responsible for compliance could void the user's authority to operate the equipment.

THE FCC WANTS YOU TO KNOW

This device complies with Part 15 of the FCC rules. Operation is subject to the following two conditions:

(1) This device may not cause harmful interference and
(2) this device must accept any interference received, including interference that might cause undesired operation.

Changes or modifications to this unit not expressly approved by the party responsible for compliance could void the user's authority to operate the equipment.

Industry Canada Notice

This device complies with RSS-247 of Industry Canada. Operation is subject to the following two conditions:

(1) this device may not cause interference, and
(2) this device must accept any interference, including interference that may cause undesired operation of the device.

This digital apparatus does not exceed the Class B limits for radio noise emissions from digital apparatus set out in the Radio Interference Regulations of Industry Canada.

IC NUMBERS: 255A-8042432

THE SOURCE – WARRANTY

The Source warrants that this product will be free from defects in materials and workmanship for a period of 12 months from the date of purchase. Within this period, simply take the product and your proof of purchase to any The Source store or participating dealer and the product will be replaced (where available) without charge. Any product which has been subject to misuse or accidental damage is excluded from this warranty.
This warranty is only applicable to a product purchased through The Source company-owned stores or participating dealers in Canada where the warranty is included with the product. While this warranty does not confer any legal rights other than those set out above, you may have additional statutory rights which will vary under the laws of the various countries, states, provinces and other governmental entities in which The Source operates. This warranty is subject to all statutory rights you may have in Canada.

Imported by:
The Source,
Barrie, Ontario, Canada, L4M 4W5

Manufactured in China

www.headrushaudio.com

Please Recycle

© 2015 The Source
All rights reserved.

FCC Caution.

§15.19 Labelling requirements.

This device complies with part 15 of the FCC Rules. Operation is subject to the following two conditions: (1) This device may not cause harmful interference, and (2) this device must accept any interference received, including interference that may cause undesired operation.

§15.21 Information to user.
Any Changes or modifications not expressly approved by the party responsible for compliance could void the user's authority to operate the equipment.

§15.105 Information to the user.
Note: This equipment has been tested and found to comply with the limits for a Class B digital device, pursuant to part 15 of the FCC Rules. These limits are designed to provide reasonable protection against harmful interference in a residential installation. This equipment generates uses and can radiate radio frequency energy and, if not installed and used in accordance with the instructions, may cause harmful interference to radio communications. However, there is no guarantee that interference will not occur in a particular installation. If this equipment does cause harmful interference to radio or television reception, which can be determined by turning the equipment off and on, the user is encouraged to try to correct the interference by one or more of the following measures:
-Reorient or relocate the receiving antenna.
-Increase the separation between the equipment and receiver.
-Connect the equipment into an outlet on a circuit different from that to which the receiver is connected.
-Consult the dealer or an experienced radio/TV technician for help.

*RF warning for Mobile device:
This equipment complies with FCC radiation exposure limits set forth for an uncontrolled environment. This equipment should be installed and operated withminimum distance 20cm between the radiator & your body.