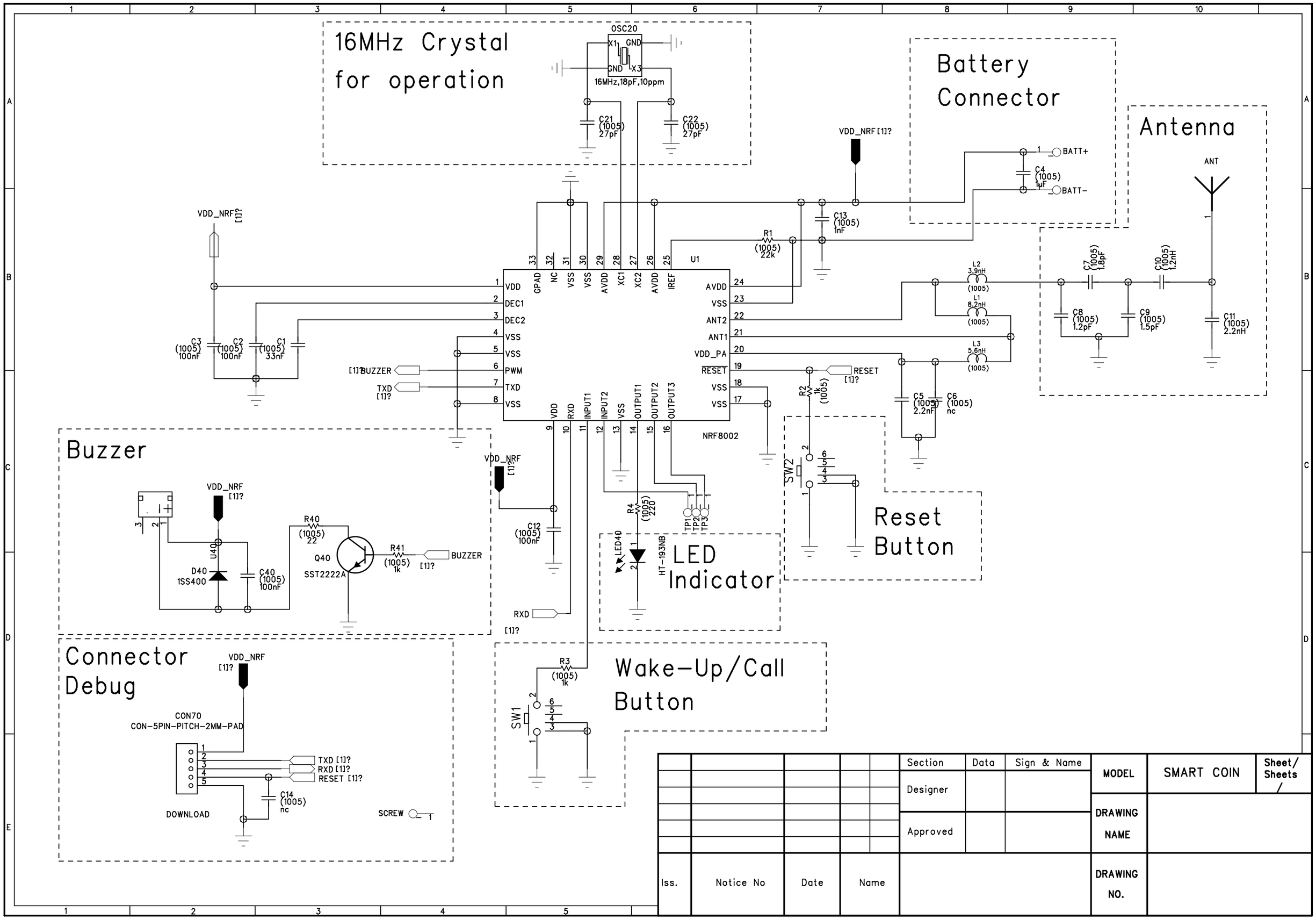

					Section	Data	Sign & Name	MODEL	SMART COIN	Sheet/ Sheets
					Designer			DRAWING NAME		
					Approved					
Iss.	Notice No	Date	Name					DRAWING NO.		