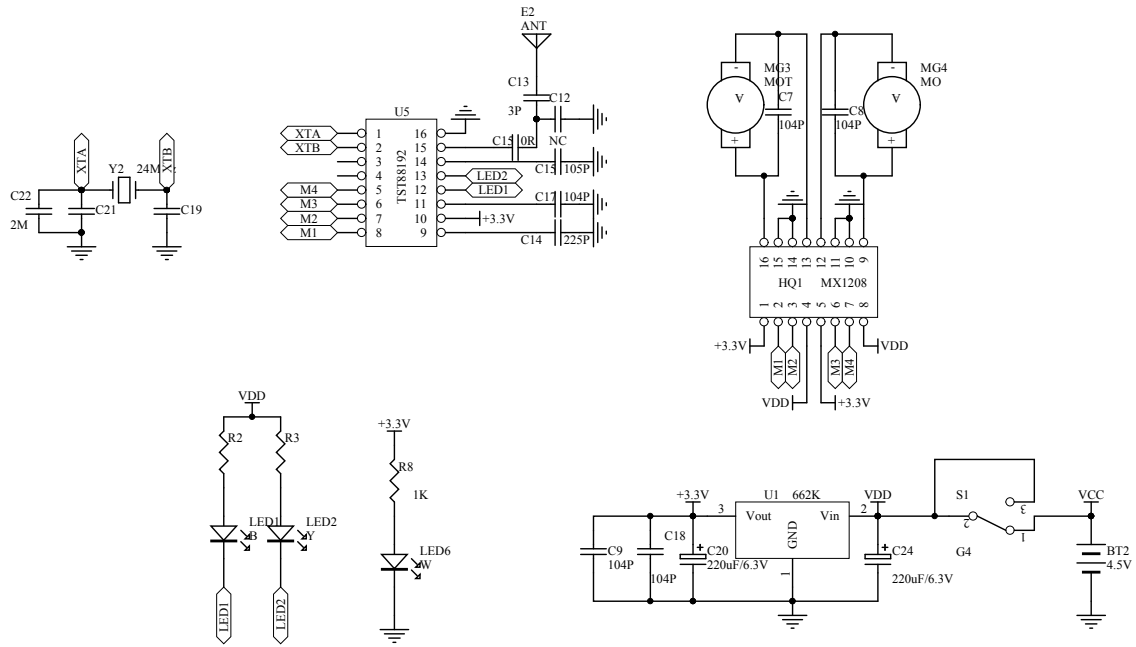

Title		
SCH		
Size: B	Number	Revision
Date:		
File::		