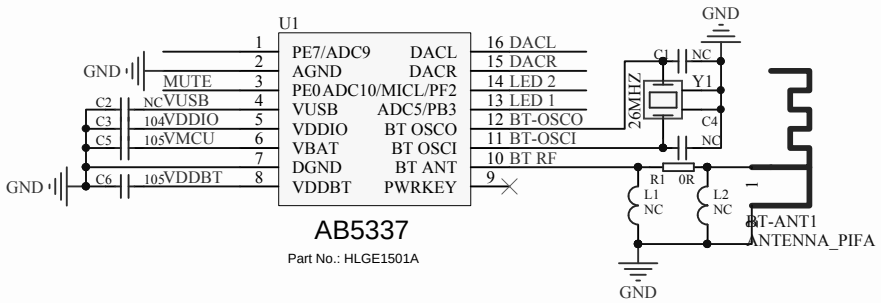
U1
PE7/ADC9
AGND
PE0 ADC10/MICL/PF2
VUSB
VDDIO
VBAT
DGND
VDDBT
DACL
DACR
LED 2
LED 1
BT OSCO
BT OSCI
BT ANT
PWRKEY
16 DACL
15 DACR
14 LED 2
13 LED 1
12 BT-OSCO
11 BT-OSCI
10 BT RF
MUTE
VUSB
VDDIO
VMCU
VDDBT
GND
C1 NC
C4 NC
Y1
26MHZ
R1 0R
L1 NC
L2 NC
BT-ANT1
ANTENNA_PIFA
AB5337
Part No.: HLGE1501A

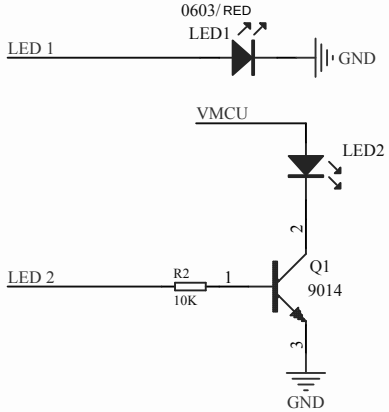
0603/RED
LED1
LED 1
GND
VMCU
LED2
LED 2
R2
10K
Q1
9014
GND

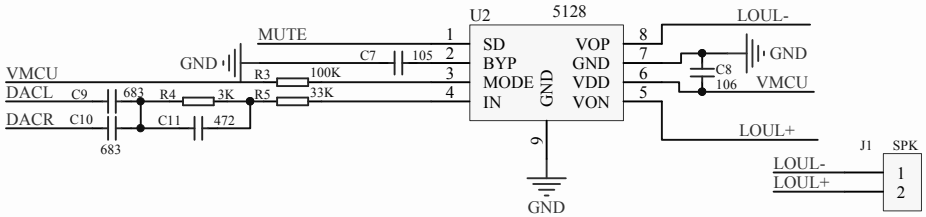
U2
5128
MUTE
VMCU
DACL
DACR
C9 683
C10 683
R4 3K
C11 472
R5 33K
R3 100K
C7 105
SD
BYP
MODE
IN
GND
VOP
GND
VDD
VON
LOUL-
LOUL+
C8 106
J1
SPK
GND

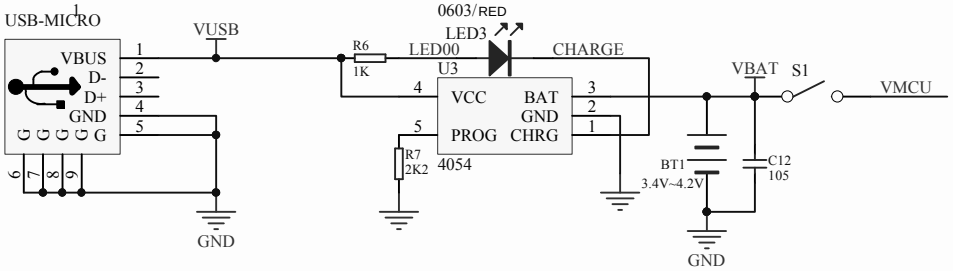
USB-MICRO
VBUS
D-
D+
GND
VUSB
R6 1K
LED00
0603/RED
LED3
CHARGE
U3
VCC
BAT
GND
PROG
CHRG
4054
R7 2K2
BT1 3.4V~4.2V
C12 105
VBAT
S1
VMCU
GND