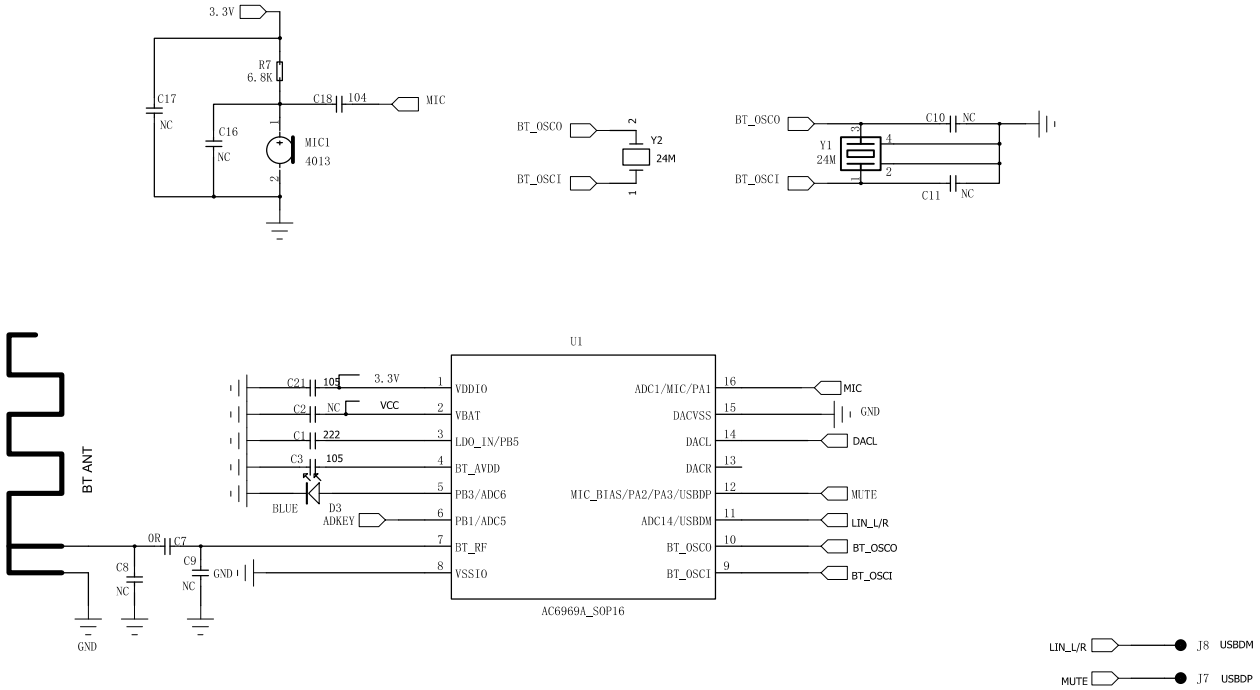
3.3V
R7
6.8K
C17
NC
C16
NC
C18
104
MIC
MIC1
4013
BT_OSCO
BT_OSCI
Y2
24M
Y1
24M
C10
NC
C11
NC
U1
VDDIO
VBAT
LDO_IN/PB5
BT_AVDD
PB3/ADC6
PB1/ADC5
BT_RF
VSSIO
ADC1/MIC/PA1
DACVSS
DACL
DACR
MIC_BIAS/PA2/PA3/USBDP
ADC14/USBDM
BT_OSCO
BT_OSCI
C21
105
C2
NC
C1
222
C3
105
BLUE
D3
ADKEY
VCC
GND
MIC
DACL
MUTE
LIN_L/R
BT_OSCO
BT_OSCI
BT ANT
0R
C7
C8
NC
C9
NC
AC6969A_SOP16
LIN_L/R
J8
USBDM
MUTE
J7
USBDP

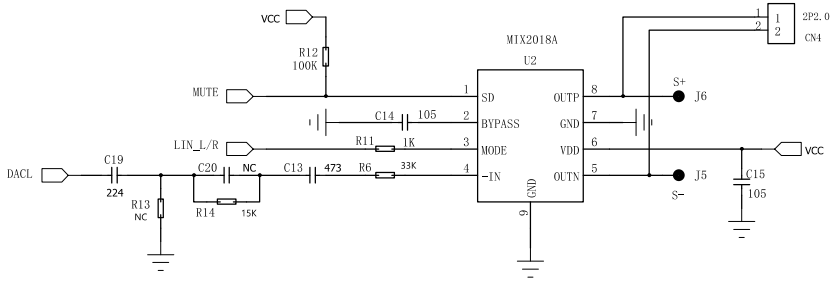
VCC
R12
100K
MIX2018A
U2
MUTE
SD
C14
105
BYPASS
LIN_L/R
R11
1K
MODE
DACL
C19
224
C20
NC
C13
473
R6
33K
-IN
R13
NC
R14
15K
OUTP
GND
VDD
OUTN
S+
J6
S-
J5
C15
105
2P2.0
CN4

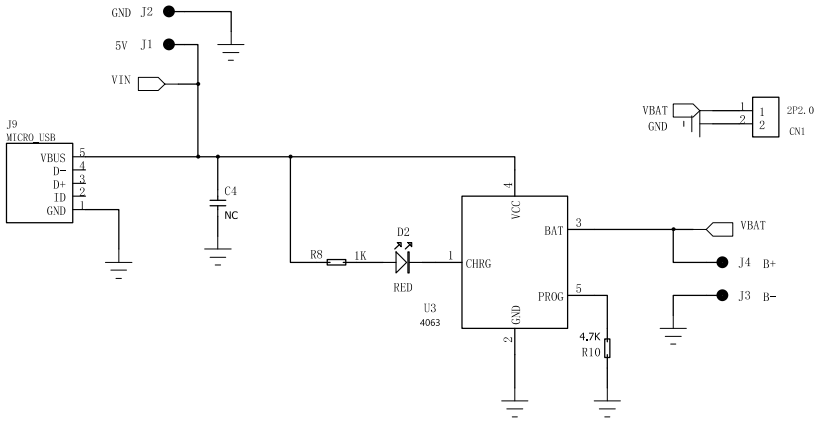
GND J2
5V J1
VIN
J9
MICRO_USB
VBUS
D-
D+
ID
GND
C4
NC
R8
1K
D2
RED
U3
4063
VCC
CHRG
BAT
PROG
GND
4.7K
R10
VBAT
J4 B+
J3 B-
VBAT
GND
2P2.0
CN1

POWER

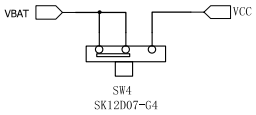
VBAT
VCC
SW4
SK12D07-G4