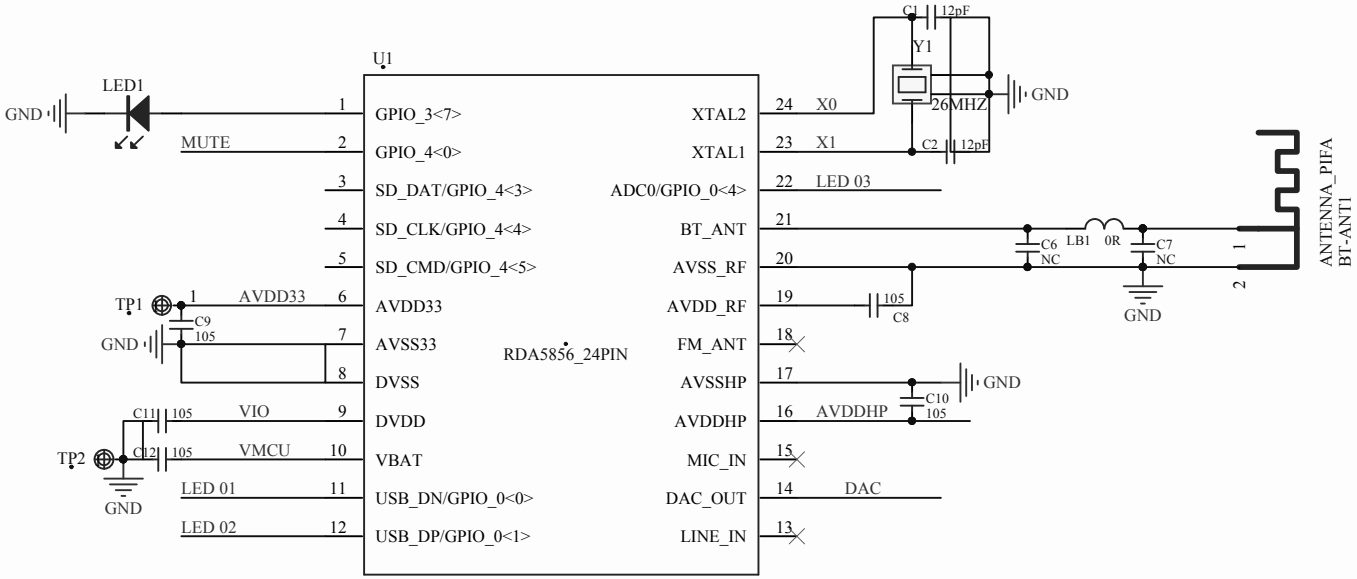

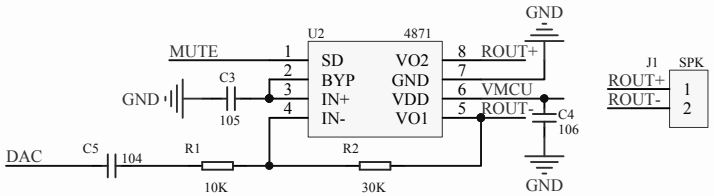

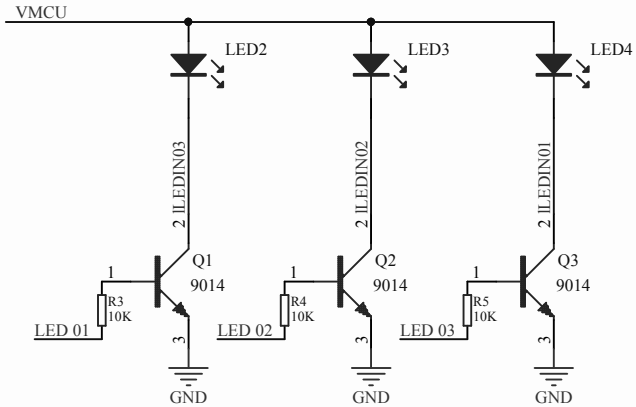

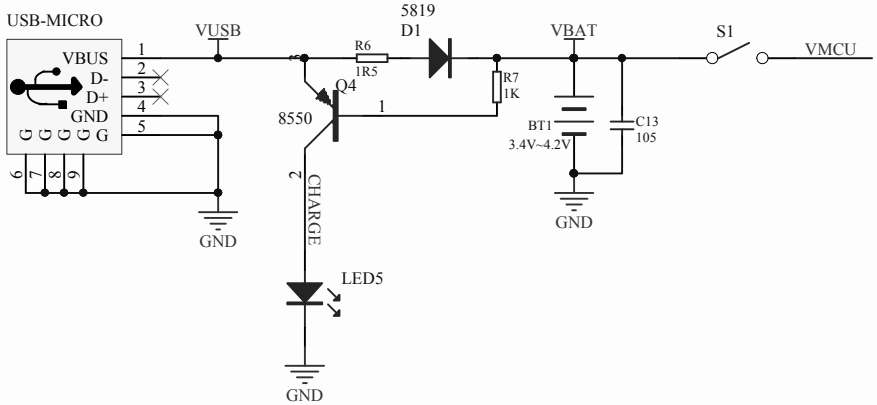

Title		
Size A4	Number	Revision
Date: 2017/11/17	Sheet of	