Inverted F Antenna Specification

Summary

ITEM	ANT SPEC					
Model Name	2.4G ANT					
Center Frequency	Horizontal			Vertical		
	2400MHz	2400MHz	2500MHz	2400MHz	2400MHz	2500MHz
	-1.73	-0.84	-0.68	-6.15	-3.70	-2.32
MAX. Gain	-0.68					
Polarization	Horizontal and Vertical					
Azimuth Beam Pattern	Omni-directional					
Impedance	50 Ohm					
Antenna Length	38.20mm					
Manufacture	ZHUHAI JIELI TECHNOLOGY CO.,LTD					
Address	No. 333 Kexing Road, Xiangzhou District, Zhuhai City					

Antenna Photo & Length (mm)

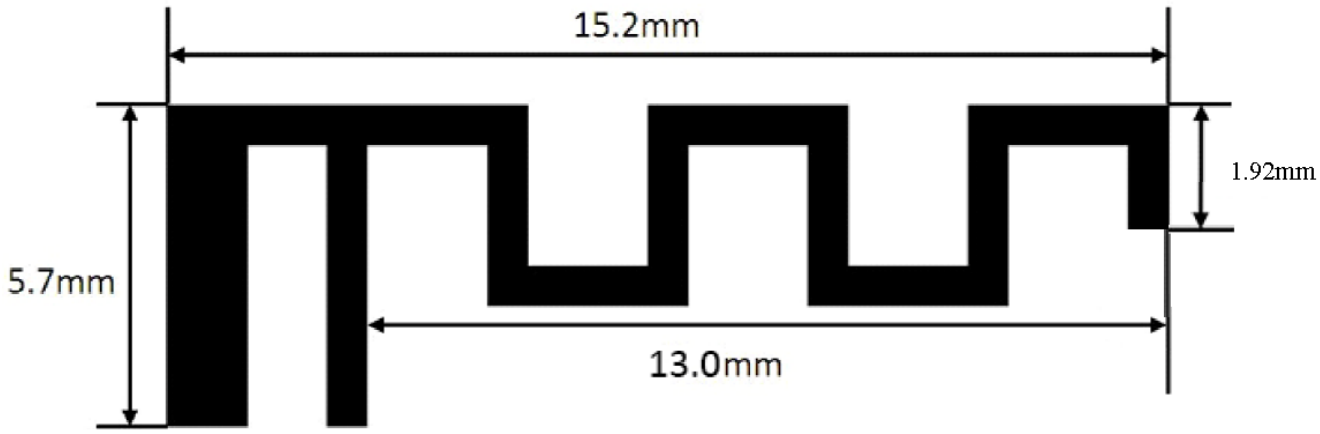

Horizontal: 2400 MHz 2450 MHz 2500 MHz

Power (dBm)

Max: 0 Min: -40 Scale: 5/div

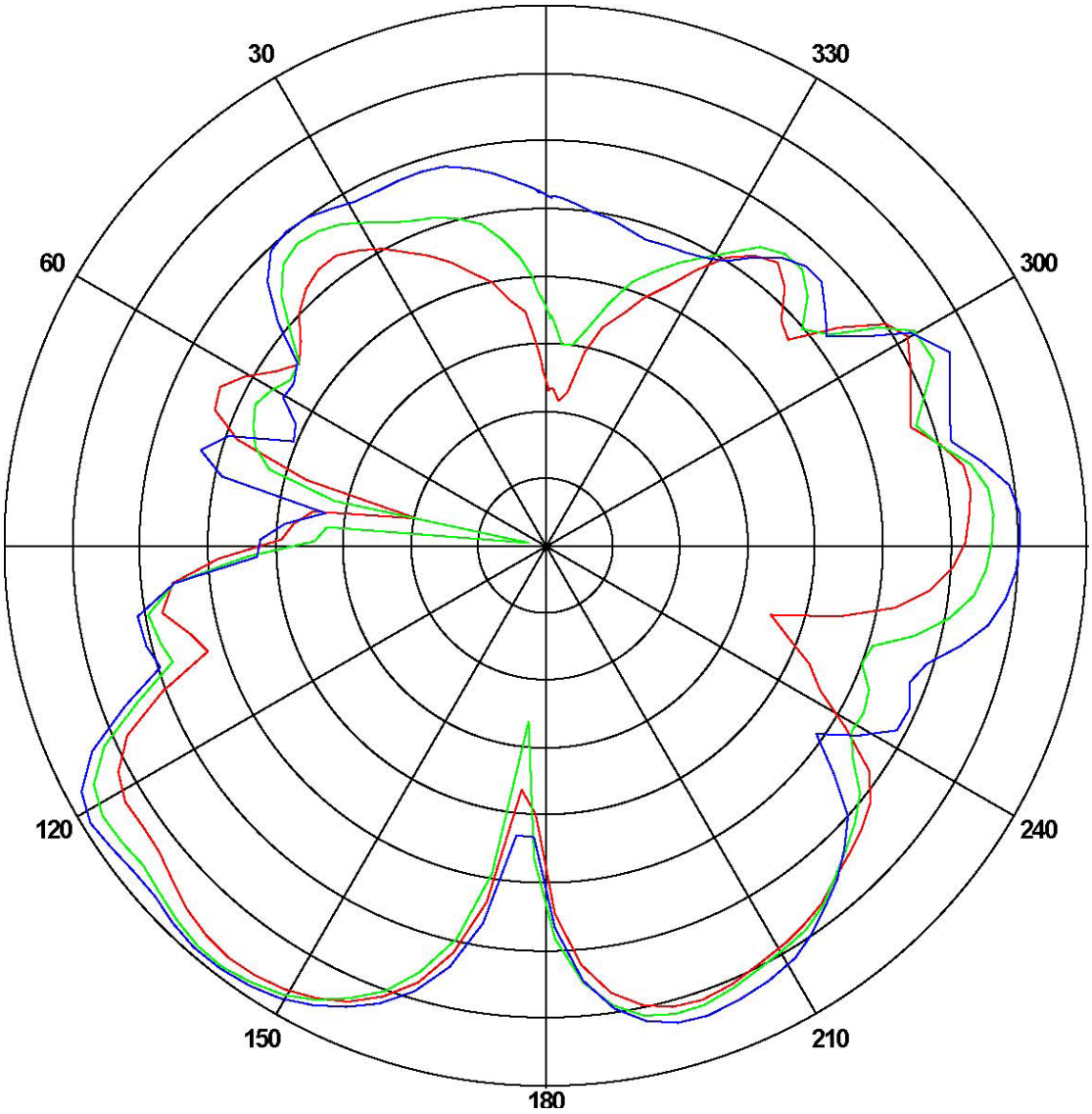

Frequency (MHz)	Gain(dB)		
	Max	Min	Avg
2400	-1.73178	-30.0815	-8.48713
2450	-0.845801	-38.5605	-7.88012
2500	-0.685586	-24.0318	-6.79139

Vertical: 2400 MHz 2450 MHz 2500 MHz
Power (dBm)
Max: 0 Min: -30 Scale: 5/div

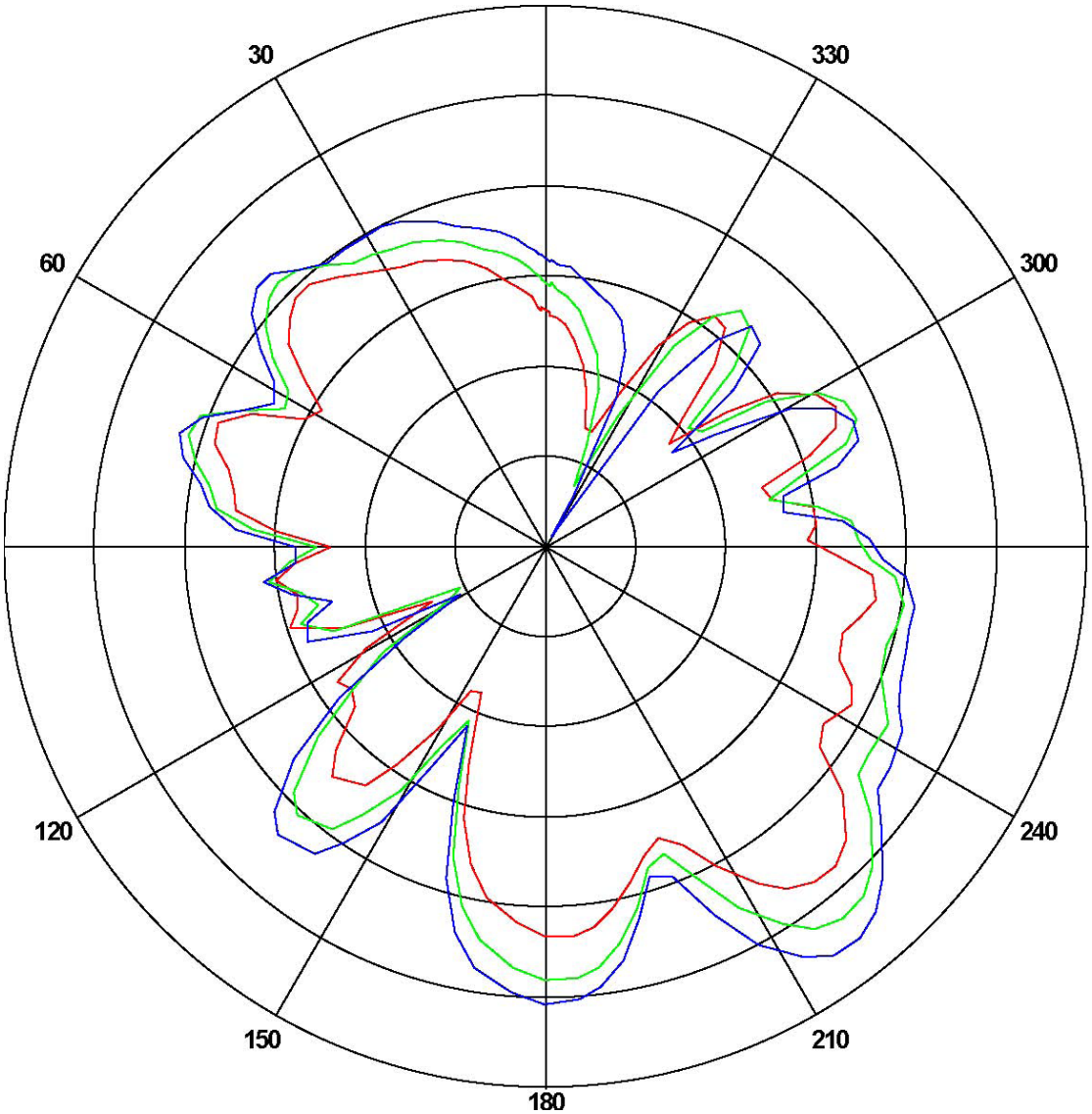

Frequency (MHz)	Gain(dB)		
	Max	Min	Avg
2400	-6.1530	-24.1420	-13.0295
2450	-3.7054	-26.5836	-10.6700
2500	-2.32122	-30.4301	-9.70536

ANT Test Labs：Attestation of Global Compliance Co., Ltd.