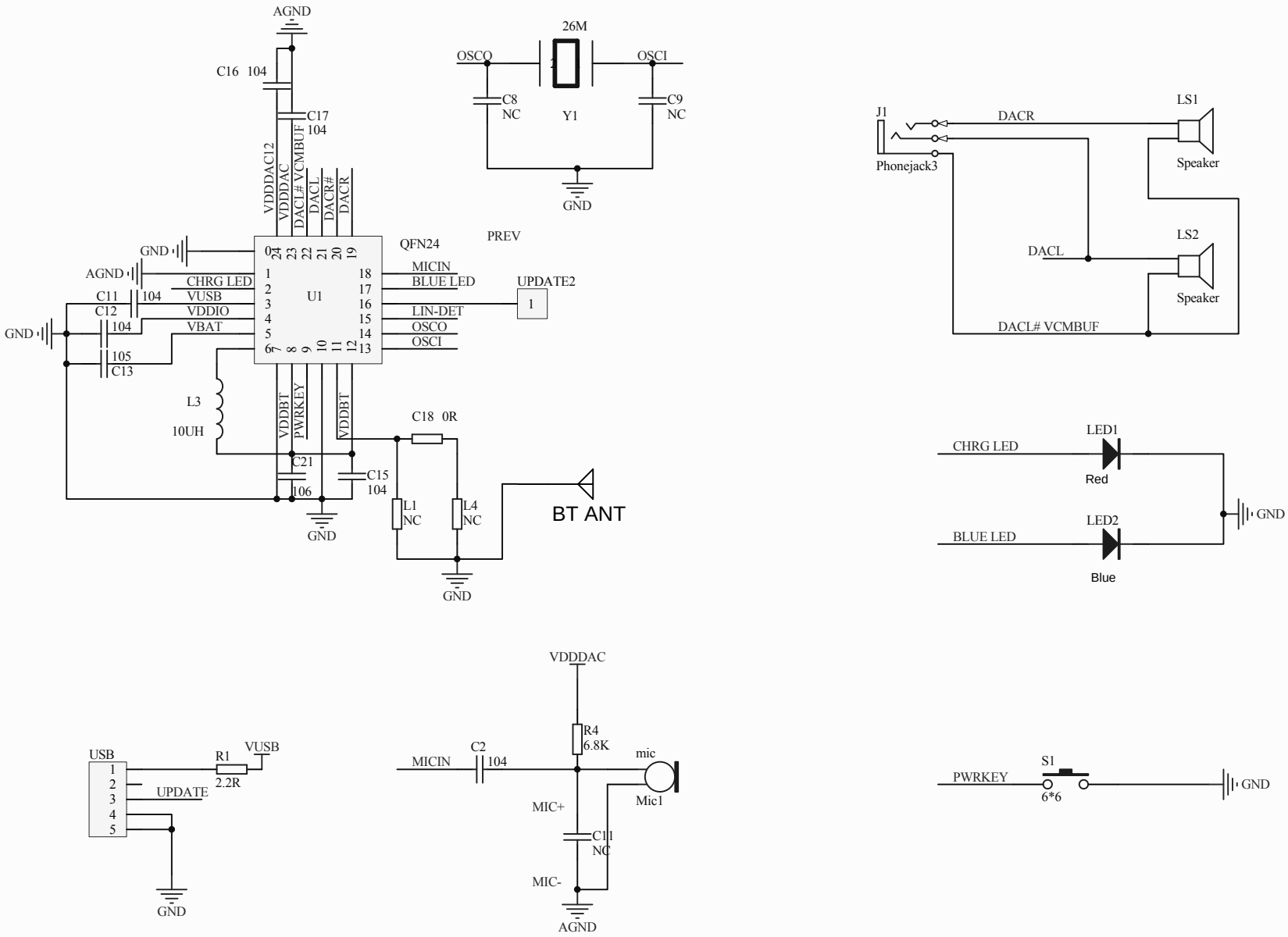
AGND
C16 104
C17
104
VDDDAC12
VDDDAC
DACL# VCMBUF
DACL
DACR#
DACR
26M
OSCO
OSCI
C8
NC
Y1
C9
NC
GND
PREV
QFN24
GND
AGND
CHRG LED
VUSB
VDDIO
VBAT
C11 104
C12
104
105
C13
U1
MICIN
BLUE LED
LIN-DET
OSCO
OSCI
UPDATE2
1
L3
10UH
VDDBT
PWRKEY
VDDBT
C18 0R
C21
106
C15
104
L1
NC
L4
NC
BT ANT
J1
Phonejack3
DACR
LS1
Speaker
DACL
LS2
Speaker
DACL# VCMBUF
CHRG LED
LED1
Red
BLUE LED
LED2
Blue
USB
R1
2.2R
VUSB
UPDATE
VDDDAC
R4
6.8K
MICIN
C2
104
mic
Mic1
MIC+
C11
NC
MIC-
AGND
PWRKEY
S1
6*6