Date: 22 JAN 2024
Product: ET-0815 IM

Size: 13.7(W) x 8.66(H)in
350(W) x 220(H)mm

AGES 8+

MORPH-X

REMOTE CONTROL TRANSFORMING JET

Instruction Manual

Thank you for purchasing the Morph-X Remote Control Transforming Jet. This manual provides more information about this product, please read the instructions before using.

Product Overview

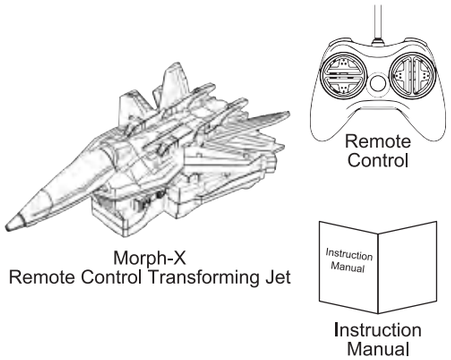

Jet Power On/Off

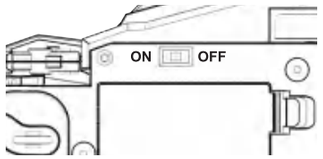

Slide the ON/OFF Switch to ON to turn on.
Slide the ON/OFF Switch to OFF to turn off.

Package Contents

1(One) Morph-X Remote Control Transforming Jet
7.4in. X 4.33in. X 2.67in. (18.8cm X 11cm X 6.8cm)
1(One) Remote Control
10.15in. x 3.54in. x 1.41in. (25.8cm x 9cm x 3.6cm)
1(One) Instruction Manual

Specifications

Power Supply:
Morph-X Remote Control Transforming Jet Power Supply:
3 x AAA 1.5V Batteries (Not Included)
Remote Control Power Supply:
2 x AA 1.5V Batteries (Not Included)
Frequency: 27 MHz (BLUE JET)
40 MHz (GRAY JET)

Remote Control

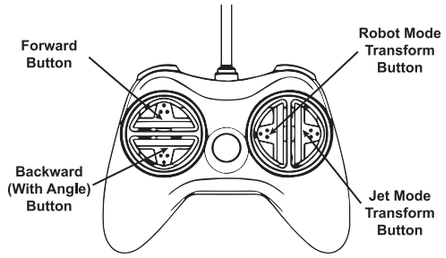

Operate Your Jet

Note: To avoid losing control, always pay attention when playing the Morph-X Remote Control Transforming Jet.

Forward

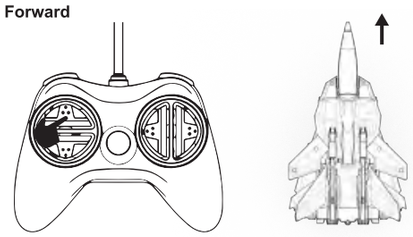

Press the forward button to control the Jet move forward

Backward

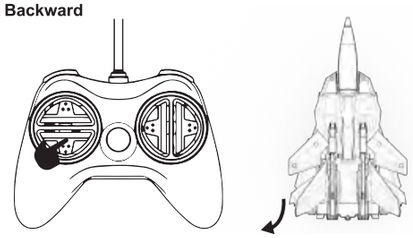

Press the back button to control the Jet move backward (With Angle)

Operate Your Jet

Robot Mode Transform

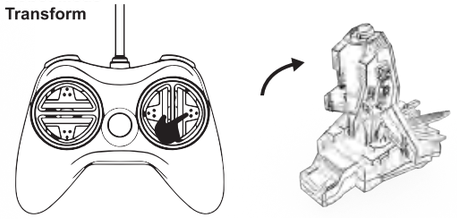

Press and hold the Robot Mode Transform button to control the Jet transform to Robot Mode

Jet Mode Transform

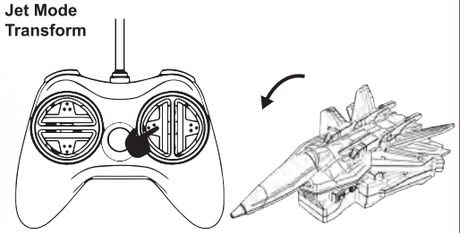

Press and hold the Jet Mode Transform button to control the Jet transform to Jet Mode

Batteries Installation-Jet

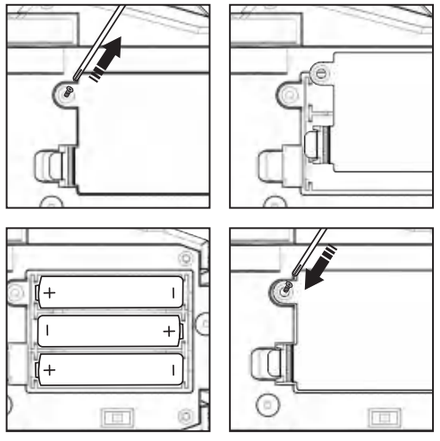

To install batteries into the Morph-X Remote Control Transforming Jet, unscrew the screw on the battery box cover to open the battery compartment. Insert 3 x "AAA" 1.5V batteries (Not Included) into the battery box. Batteries should be placed as shown on the diagram.
Put back in place the battery box cover and tighten the screw.

Notice:
When placing the batteries, you must insert according to the correct polarity, the Morph-X Remote Control Transforming Jet won't function if batteries are reversed.

Batteries Installation-Remote Control

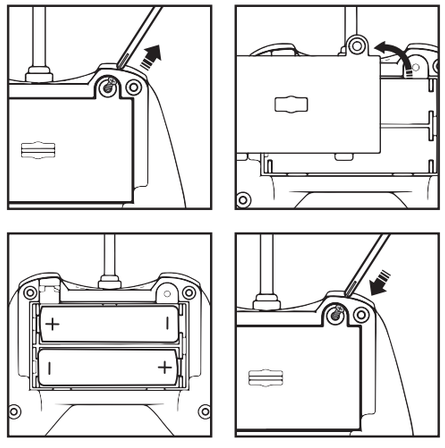

To install batteries into the Remote Control, unscrew the screw on the battery box cover to open the battery compartment. Insert 2 x "AA" 1.5V batteries (Not Included) into the battery box. Batteries should be placed as shown on the diagram.
Put back in place the battery box cover and tighten the screw.

Notice:
When placing the batteries, you must insert according to the correct polarity, the Remote Control won't function if batteries are reversed.

Performance Tips

1. Do not drive the Morph-X Remote Control Transforming Jet in the sea or lake.
2. Do not drive the Morph-X Remote Control Transforming Jet in windy or rainy weather.
3. Do not drive the Morph-X Remote Control Transforming Jet into any sharp object.

Care and Maintenance

1. Always use dry and soft cloth to clean this product.
2. Avoid this product from being exposed to sunlight or heat.
3. Avoid to immerse this toy into the water with the cover unlocked, otherwise, the electronic parts may be damaged.
4. Check the product regularly. If any damages are discovered, please stop using immediately, until it is completely repaired in good working condition.

IMPORTANT: BATTERY INFORMATION

For AAA Batteries

⚠WARNING: TO AVOID BATTERY LEAKAGE

1) The batteries used with this product are small parts and should be kept away from small children who still put things in their mouths. If they are swallowed, promptly see a doctor and have the doctor phone American Association of Poison Control Centers (1-800-222-1222).
2) Always purchase the correct size and grade of battery most suitable for intended use.
3) Do not mix old and new batteries, alkaline, standard (Carbon - Zinc) or rechargeable (Nickel-cadmium) batteries.
4) Clean the battery contacts and those of the device prior to battery installation.
5) Ensure the batteries are installed correctly with the regard to polarity (+ and -).
6) Always remove batteries if consumed or if product is to be left unused for a long time.

For AA Batteries

⚠WARNING: TO AVOID BATTERY LEAKAGE

1) Be sure to insert the batteries correctly, and always follow the toy/game and battery manufacturers' instructions.
2) Do not mix old and new batteries or alkaline, standard (carbon-zinc) or rechargeable (nickel-cadmium) batteries.
3) Always remove weak or dead batteries from the product.
4) Remove the battery if the product is left unused for a long period of time.

Warning

This product is suitable to be used by people who has operating experience in remote toy or aged no less than 8 years old.

Please do not put the product in your mouth to prevent choking hazard of small parts.

Please do not put the finger into available interspaces.

Please do not play the product in a brutal way such as throwing, crashing or twisting it.

Please store the smaller-sized product accessories in places that are out of reach of children, in order to avoid the occurrence of accidents.

Avoid placing the batteries in places in high temperatures and avoid exposure to heat.

When young children are operating the product, it shall be ensured that the adults are guiding and making sure the product control is within the viewing range of the controller (or instructor) so that it makes the control of the toy more convenient.

When the product is not in use, please switch off the power supplies of the toy, and remove the batteries from the product.

Please note that we won't take any responsibility for any wrong operation as this may result in severe injury or loss of property, and we cannot control the operating process during the time when the user assembles or uses this product.

Once this product is sold, we won't be responsible for any safety responsibility during the time the user operates or uses controls this products.

FCC Statement

This device complies with the part 15 of the FCC rules. Operation is subject to the following two conditions:(1) this device may not cause harmful interference, and (2) this device must accept any interference received, including interference that may cause undesired operation.
Caution: changes or modifications not expressly approved by the party responsible for compliance could void the user's authority to operate the equipment.

NOTE: This equipment has been tested and found to comply with the limits for a Class B digital device, pursuant to Part 15 of the FCC Rules. These limits are designed to provide reasonable protection against harmful interference in a residential installation. This equipment generates, uses and can radiate radio frequency energy and, if not installed and used in accordance with instructions may cause harmful interference to radio communications. However, there is no guarantee that interference will not occur in a particular installation. If this equipment does cause harmful interference to radio or television reception, which can be determined by turning the equipment off and on. The user is encouraged to try to correct the interference by one or more of the following measures:
• Reorient or relocate the receiving antenna.
• Increase the separation between the equipment and receiver.
• Connect the equipment into an outlet on a circuit different from that to which the receiver is connected.
• Consult the dealer or experienced radio/ TV technician for help.

RF warning statement:
The device has been evaluated to meet general RF exposure requirement. The device can be used in portable exposure condition without restriction.

FCC ID: 2ADM5-ET-0815-27(BLUE JET)
2ADM5-ET-0815-40(GRAY JET)

FC

Distributed by 1616 Holdings, Inc.
701 Market Street, Suite 200
Philadelphia, PA 19106
Made in Shantou, China

Keep All Relevant Information for Future Reference

ITEM# ET-0815