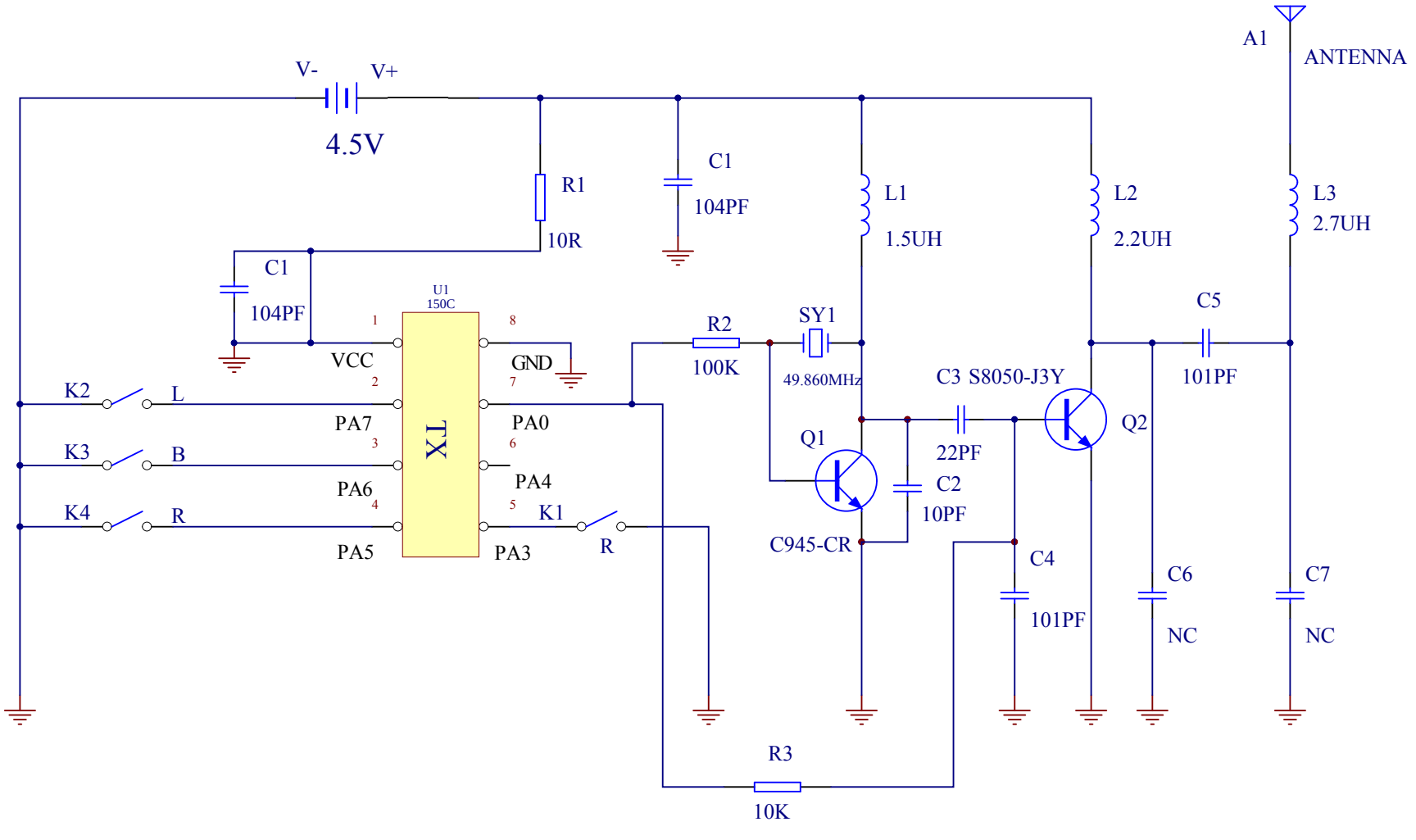
V-
V+
4.5V
R1
10R
C1
104PF
C1
104PF
U1
150C
TX
VCC
GND
PA7
PA0
PA6
PA4
PA5
PA3
K2
L
K3
B
K4
R
K1
R
R2
100K
SY1
49.860MHz
Q1
C945-CR
C2
10PF
C3 S8050-J3Y
22PF
Q2
C4
101PF
R3
10K
L1
1.5UH
L2
2.2UH
C5
101PF
C6
NC
A1
ANTENNA
L3
2.7UH
C7
NC