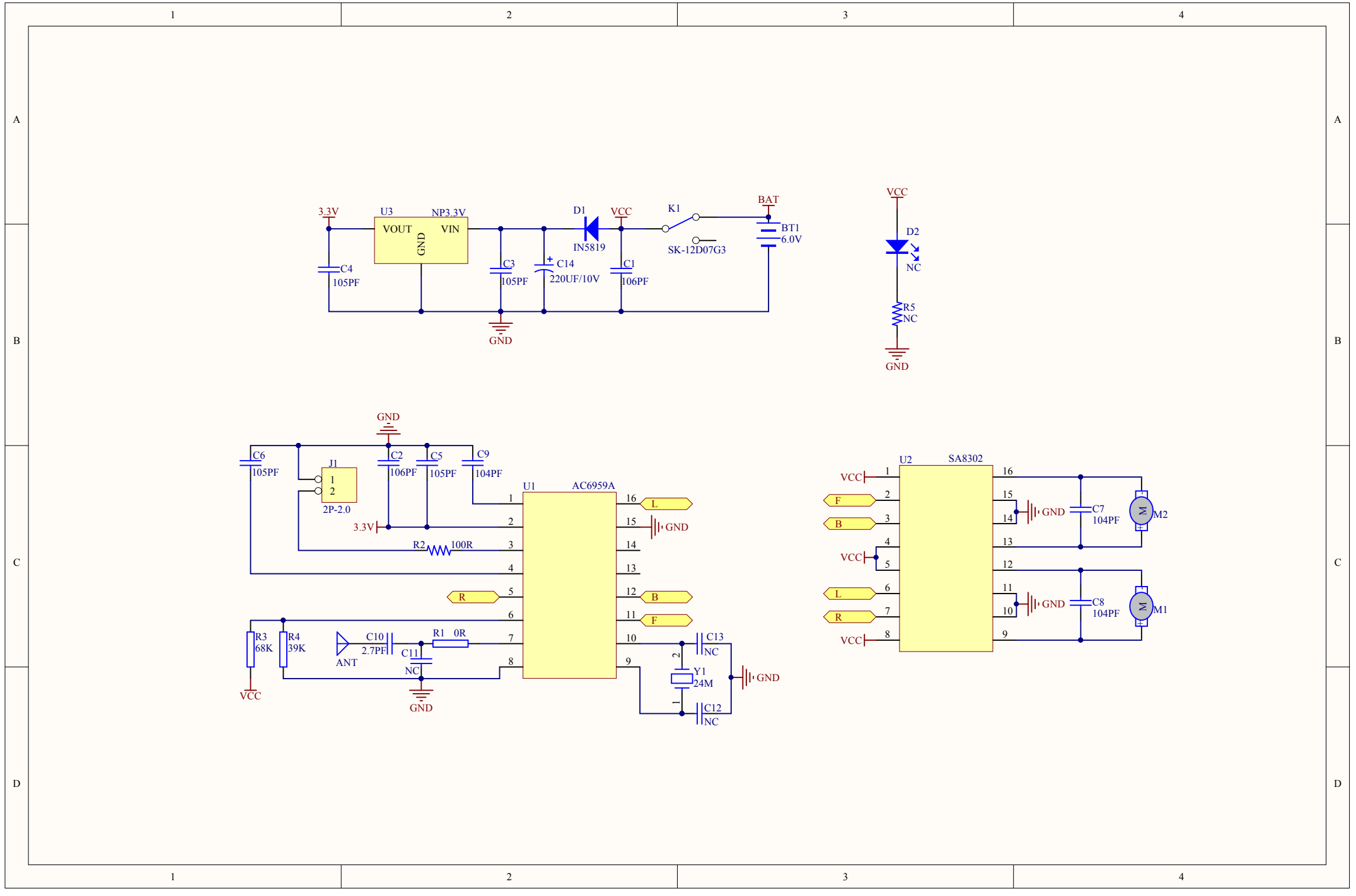
3.3V
U3
NP3.3V
VOUT
VIN
GND
C4
105PF
C3
105PF
C14
220UF/10V
D1
IN5819
VCC
C1
106PF
K1
SK-12D07G3
BAT
BT1
6.0V
GND
VCC
D2
NC
R5
NC
GND
GND
C6
105PF
J1
1
2
2P-2.0
C2
106PF
C5
105PF
C9
104PF
3.3V
R2
100R
U1
AC6959A
R
L
GND
B
F
R3
68K
R4
39K
ANT
C10
2.7PF
C11
NC
R1
0R
VCC
GND
C13
NC
Y1
24M
C12
NC
GND
U2
SA8302
VCC
F
B
VCC
L
R
VCC
GND
C7
104PF
M2
GND
C8
104PF
M1