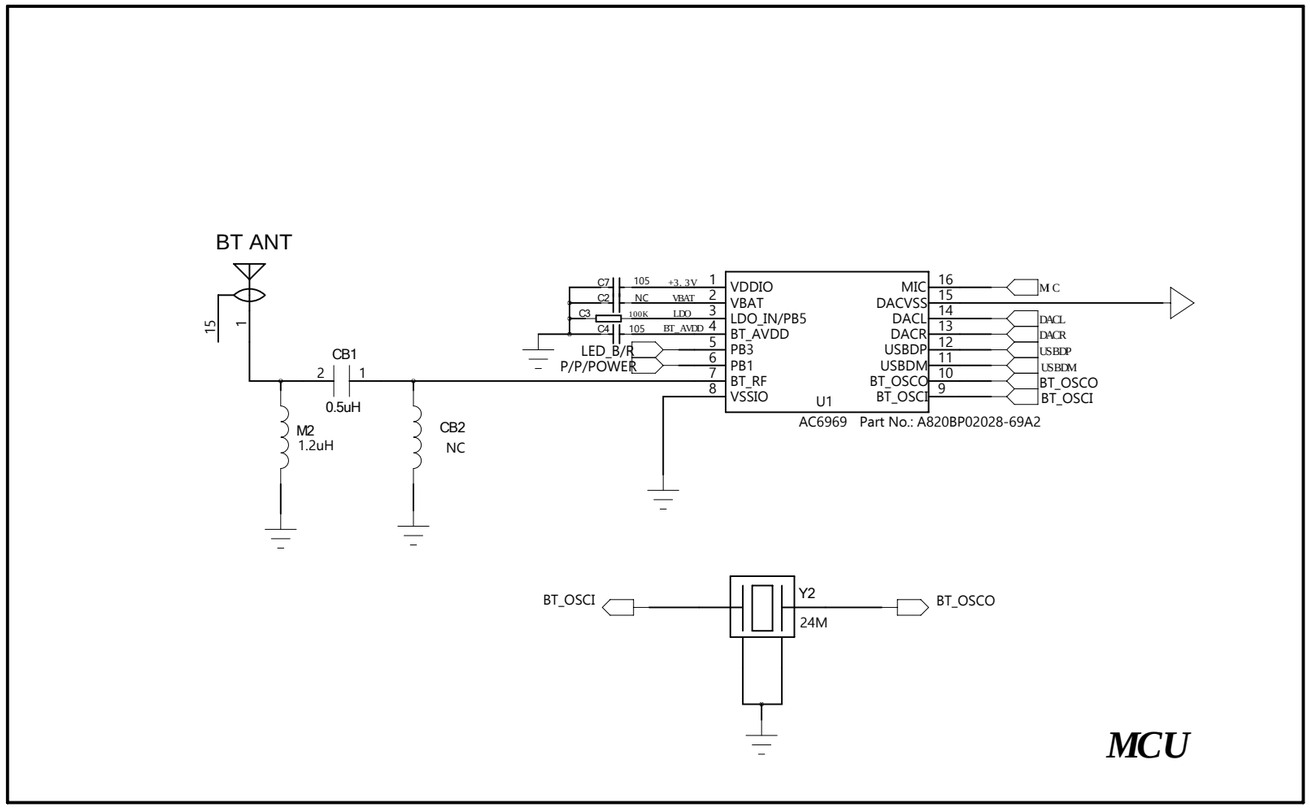

MCU

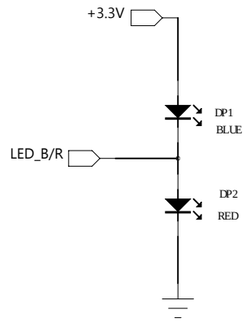

LED

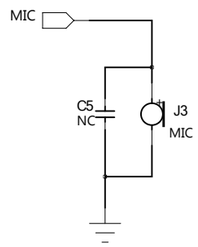

MIC

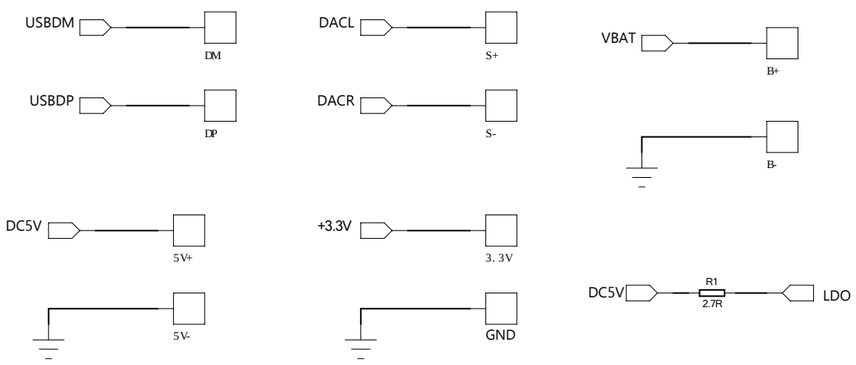

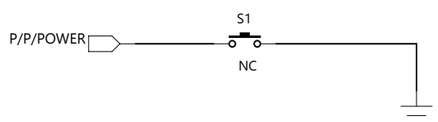

TOUCH