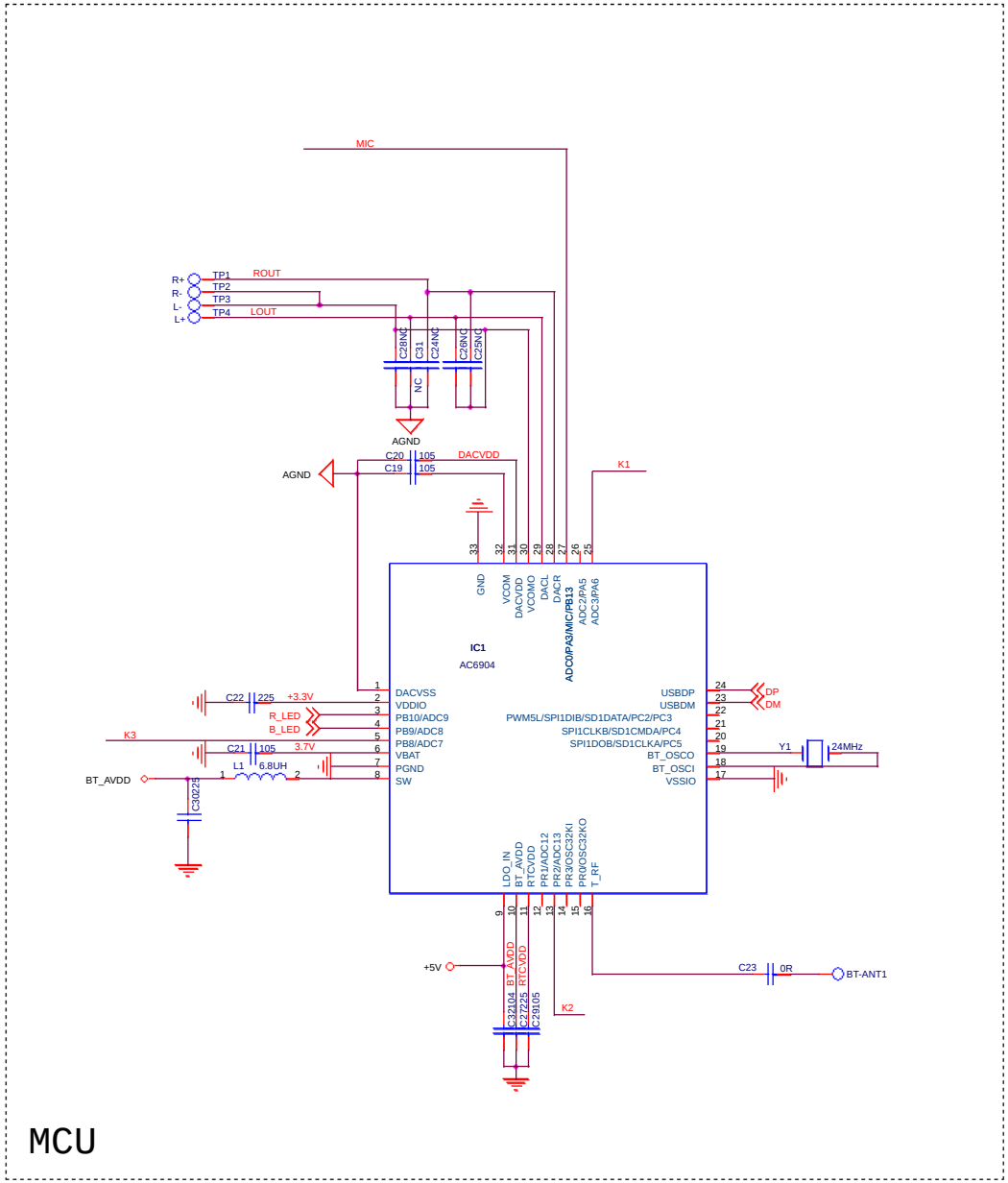

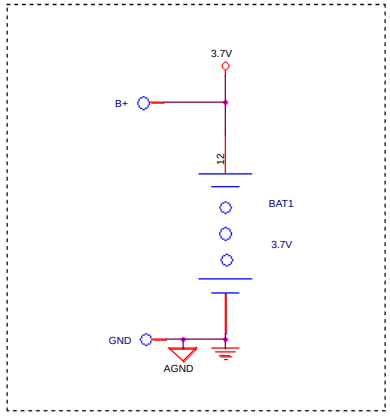

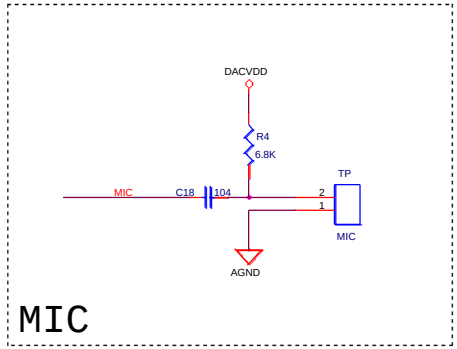

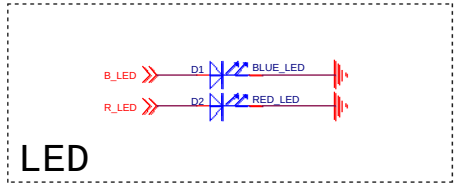

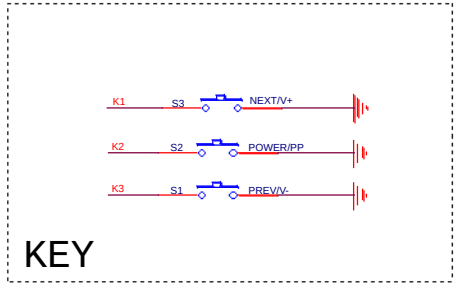

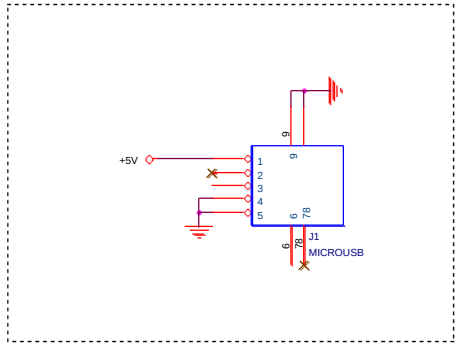

Title	**AC6904**	
Size A3	Document Number	Rev 1.0
Date: Monday, April 09, 2018	Sheet 1 of 1	