Interface Drawing

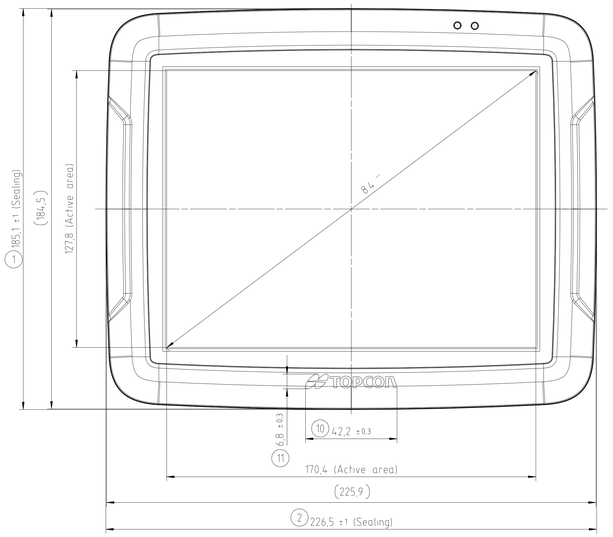

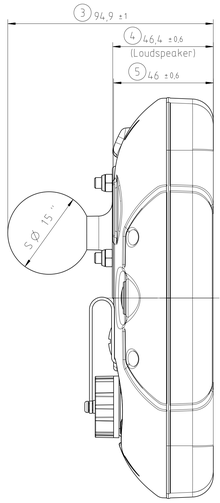

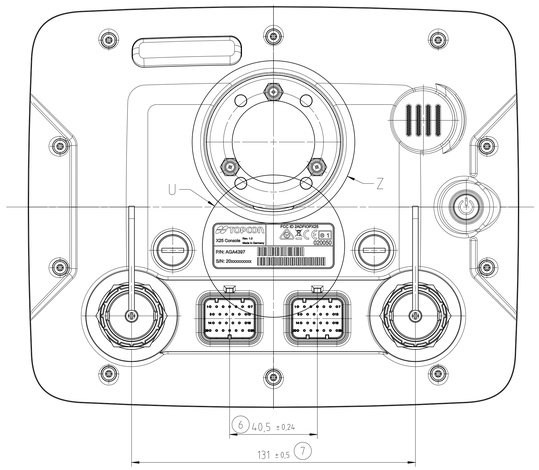

Z (2:1)

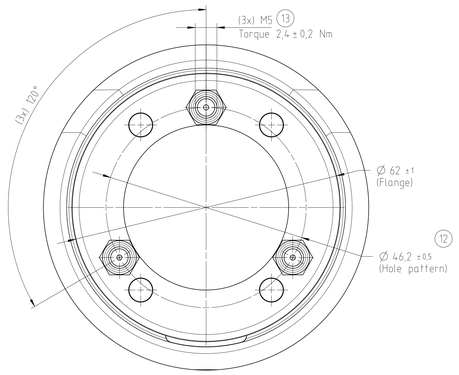

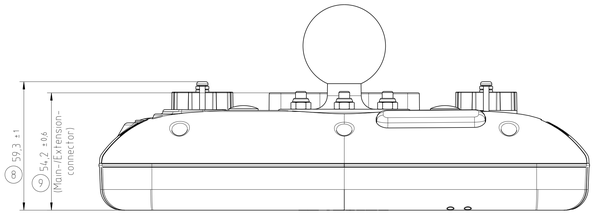

U (2:1)

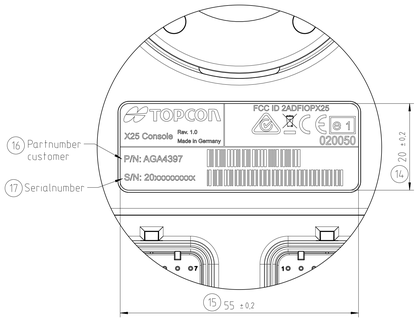

View without caps

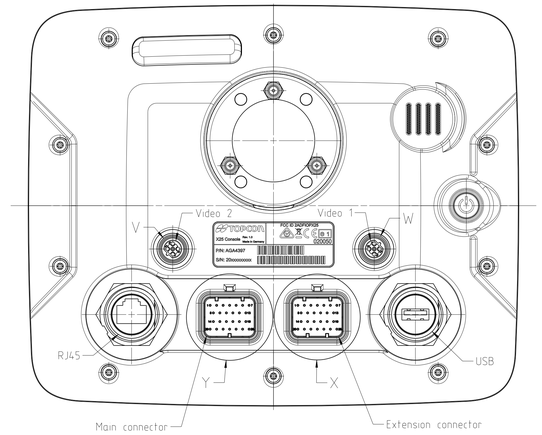

Main connector

Mating Connector for customer
Tyco Electronics 3-1437290-7

Mating Crimp Contact for customer
Tyco Electronics 3-1447221-4

Pin assignment	
Pin	Assignment
1	Power input
2	Remote power switch (Kl.15)
3	Frame ground
4	No Connect
5	Headphone Left
6	Headphone Right
7	Headphone ground
8	CAN 1 H
9	CAN 1 L
10	CAN 2 H
11	CAN 2 L
12	USB 1 5V
13	USB 1 Ground
14	USB 1 N
15	USB 1 P
16	RS232 1 RX Data
17	RS232 1 TX Data
18	Ground (reference for all RS232)
19	Radar Input
20	Analogue Input 1
21	CAN 3 H
22	CAN 3 L
23	CAN 4 H
24	CAN 4 L
25	Digital Input 1
26	Digital Input 2

Extension connector

Mating connector for customer
Tyco Electronics 3-1437290-8

Mating crimp contact for customer
Tyco Electronics 3-1447221-4

Pin assignment	
Pin	Assignment
1	RS232 2 RX Data
2	RS232 2 TX Data
3	Switched power output ground
4	RS232 3 RX Data
5	RS232 3 TX Data
6	Switched power output ground
7	Radar Speed output
8	RS232 2 RTS
9	RS232 2 CTS
10	Switched power output ground
11	RS232 4 RX (for development pp)
12	RS232 4 TX (for development pp)
13	Switched power output ground
14	n.c
15	n.c
16	n.c
17	n.c
18	Switched power output ground
19	Digital Input 3
20	n.c
21	n.c
22	n.c
23	Switched power output ground
24	Switched power output
25	Switched power output ground
26	Switched power output ground

M12 video connector 1

Pin assignment	
Pin	Assignment
1	VidSig+
2	Switchable output, e.g. Mirroring
3	Camera+
4	Camera-
5	VidSig GND

M12 video connector 2

Pin assignment	
Pin	Assignment
1	VidSig+
2	Switchable output, e.g. Mirroring
3	Camera+
4	Camera-
5	VidSig GND

USB- and RJ45-connector
as international standard

Y (2:1)
Main connector

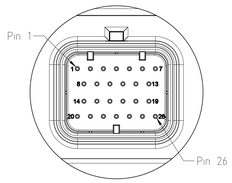

X (2:1)
Extension connector

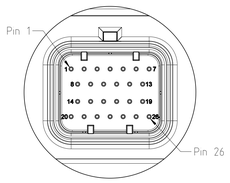

W (5:1)
M12 video connector 1

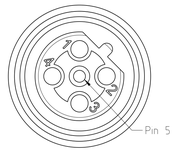

V (5:1)
M12 video connector 2

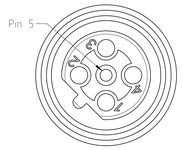

Part checks

- Checking characteristics for Initial Sample Test Report (ISIR) are marked with a ballon

Scope of application				Allowed devation		Surface	
For this drawing all rights are reserved. Delivery to third party, copying and otherwise reuse is forbidden (Protection against Unfair Competition Act				General tolerance EN ISO 14405 E DIN		DIN EN ISO 1302	
				Date		Name	
-		-			Drawn	17.04.2015	SMR
-	Last changed	17.04.15	SMR		Checked	-	-
A.0	Series	19.11.14	SMR		Norm	-	-
A.0	Prototype	14.05.14	SMR				
A.0	Lastpapier changed, bluetooth antenna changed	24.01.14	SMR	Wachendorff Elektronik GmbH & CO KG Industriestr. 40 D-97877 Wertheim www.wachendorff.de			
A.0	Lightpaper changed, bluetooth antenna changed	14.10.13	SMR				
A.0	First draft	21.01.13	SMR				
Rev	Change	Date	Name				

Scale 1:1	(Weight) 1,950 kg	
Material -		
(Material number) -		
Part name		
X25		
Item number		Sheet
OPX25SL1CANFC12_AE		1
		A0
Speicherort -		