DRAWING NUMBER 1001242423

DRAWING CREATED IN CREO MCAD. UNLESS OTHERWISE SPECIFIED, ALL DIMENSIONS ARE IN MILLIMETERS

THIS PRINT IS THE PROPERTY OF JLG INDUSTRIES,INC. AND CONTAINS PROPRIETARY AND CONFIDENTIAL INFORMATION OF JLG. IT MAY NOT BE COPIED OR DISCLOSED TO ANY THIRD PARTY WITHOUT JLG'S WRITTEN CONSENT AND IS PROVIDED FOR THE LIMITED PURPOSE OF REVIEW AND EVALUATION.

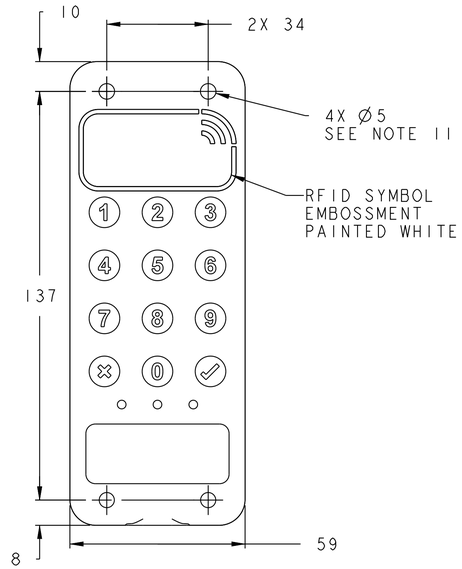

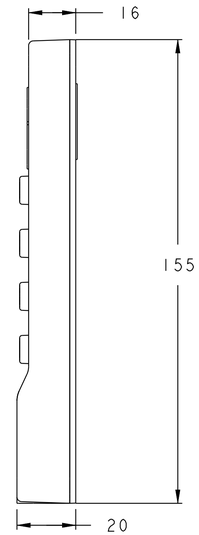

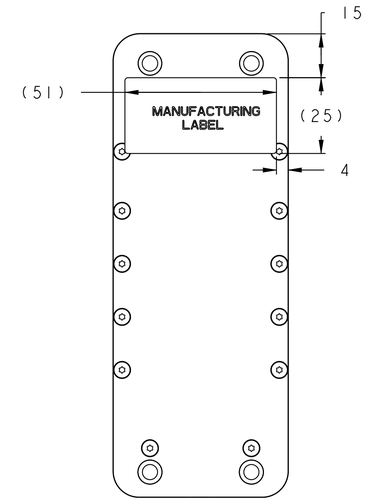

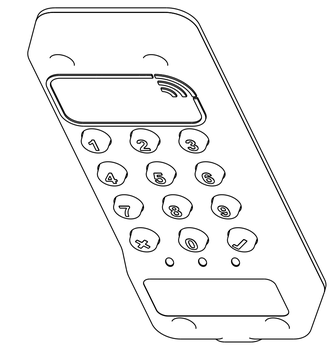

MANUFACTURER: MARSH ELECTRONICS

SPECIFICATIONS:

1. POWER:
   9V-32V DC INPUT
2. INTERFACE:CAN/J1939
3. ENVIRONMENTAL IP67 RATED
4. CERTIFICATIONS: FCC, IC, CE
5. MUST COMPLY WITH 4150320.
   EXCEPTION AS FOLLOWS:
   OPERATING TEMPERATURE RANGE IS
   -40°C TO +85°C.
6. HOUSING MATERIAL: PA66-GF33 BLACK
7. RUBBER MEMBRANE/BUTTON MATERIAL:
8. LEDS:
   NUMERIC BUTTONS: 4-LEDS COLOR: WHITE
   X BUTTON: 4-LEDS PER COLOR: WHITE AND RED
   CHECK BUTTON: 4-LEDS PER COLOR: WHITE AND GREEN
   INDICATOR 1: 1 MULTICOLOR LED:AMBER AND GREEN
   INDICATOR 2: 1 MULTICOLOR LED:AMBER AND GREEN
   INDICATOR 3: 1 MULTICOLOR LED:AMBER AND BLUE
9. 13.56 MHz RFID/NFC READER
10. MANUFACTURING LABEL TO INCLUDE JLG PART NO. (PURCHASE LEVEL (NEXT ASSY)),
    DEVICE SERIAL NUMBER, FCC ID, IC ID,
    FIRMWARE VERSION, LOT CODE, BATCH CODE, COUNTRY OF ORIGIN,
    FCC AND CE MARKINGS
11. 4 MOUNTING HOLES WITH COUNTER BORE FOR CAP SCREW FLUSH MOUNTING.

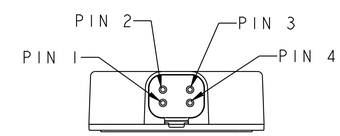

MATING CONNECTOR: DT06-4S

CONNECTOR PINOUT (HARNESS SIDE):

1. POWER
2. GROUND
3. CAN H
4. CAN L

REV	ZONE	DATE	BY	DESCRIPTION		ER NO	CHKD

REVISIONS

ALL WELDING TO JLG IND WELD SPECIFICATION 1001112769

FOR ANGLES BETWEEN 80-100 DEGREES. ALL OTHER ANGLES PER SECTION 2.3.2.6 OF AWS D.1 OR EQUIVALENT

SPECIFICATIONS

DIMENSIONING AND TOLERANCING PER ASME Y14.5M-1994

JLG GLOBAL DESIGN SOLUTION SOL#1 ☐ SOL#2 ☐ SOL#3 ☐

JLG TORQUE CHART 5000059 APPLIES TO ITEMS WITHIN ☐

NEXT ASSY 1001238392

DO NOT SCALE DRAWING

UNLESS OTHERWISE SPECIFIED ALL TOLERANCES ARE +/- MM

ALL ANGLES ±1° UNLESS OTHERWISE SPECIFIED

THIRD ANGLE PROJECTION

DRAWN BY: D.ADAMSON
DATE: 23AUG18
CHK'D. BY: K.INAMPUDI
DATE: 24AUG18
E.R. NO. 204510
FINISH:
REF. DWG.
MACH. SURF. 3.2 MAX

JLG

TITLE: ELEC ASSY, KEYPAD RFID READER

MATERIAL: SEE PARTS LIST

SIZE	CAGE CODE:	DWG NO.	REV
D	1YHH8	1001242423	A

SCALE: 1:1 | EST WT: 0.6kg | SHEET: 1 OF 1